Centrifugal Pumps for Oil Petrochemical and Natural Gas Industries

API STANDARD 610
Ninth Edition, January 2003

This standard is technically equivalent to the ISO Final Draft Standard International 13709 National Adoption Project

Special notes

API publications necessarily address general issues. In regarding certain circumstances, local, state, and the laws and federal regulations must be reviewed. API does not commit to comply with the obligations of employers, manufacturers or suppliers to warn and train properly equip your employees and exposed personnel, in relation to the health and security risks and precautions, nor fulfill their obligations by virtue of local, state, or federal laws. The information related to the safety and health risks and the appropriate preventive measures regarding certain subjects and conditions must be obtained from the employer, the manufacturer or supplier of that material or the material safety data sheet. Nothing of the Content in any API publication should be interpreted as a concession of right, by implication or otherwise, for the manufacture, marketing, or use of any method, device, or product protected by patents. There is also no Nothing in the publication shall be understood as ensuring anyone against liability for patent infringement. In general, API rules are they will be examined and reviewed, reaffirmed or withdrawn at least every five years. A sometimes an extension of up to two years will be added to this cycle of review. This publication will no longer be in force five years after its date of publication as operational API standard or, if an extension has been granted, prior reissue. The status of the publication can be determined from the phone API. Downstream segment (202) 682-8000. A catalog of publications and materials from API is published annually and updated quarterly by API, 1220 L Street, NW, Washington, DC 20005. This document has been prepared under the procedures of API normalization that ensures proper notification and participation in the development process and is designated as an API standard. Issues related to interpretation of the content of this standard or comments and questions related to it procedures under which this standard was developed must be directed by written to the director/general manager of the Downstream segment, American Petroleum Institute, 1220 L Street, NW, Washington, DC 20005. Authorization requests to reproduce or translate all or part of the material published in this document They should also be addressed to the director. API standards are published to facilitate the broad availability of proven good engineering and operating practices. These standards do not They are intended to bypass the need for sound engineering judgment. regarding when and where these standards must be used. The formulation and The publication of API standards is not intended in any way to inhibit any user from any other practice. Any equipment manufacturer or materials in accordance with the marking requirements of an API standard brand he is the only one responsible for fulfilling all the corresponding requirements of that standard. API does not represent, guarantee, or warrant that such products are in accordance with the standard application of API

Content Page

Preface 7
Introduction 8

1 Scope 10
2 Normative references 10
3 Terms and definitions 14
4 Classification and designations 19
4.1 Designations of the pumps 19
4.1.1 OH1 type pump 19
4.1.2 OH2 type pump 20
4.1.3 OH3 type pump 20
4.1.4 OH4 type pump 20
4.1.5 OH5 type pump 21
4.1.6 OH6 type pump 21
4.1.7 BB1 type pump 22
4.1.8 BB2 type pump 22
4.1.9 BB3 type pump 22
4.1.10 BB4 type pump 23
4.1.11 BB5 Type Pump 23
4.1.12 VS1 type pump 23
4.1.13 VS2 type pump 24
4.1.14 VS3 type pump 24
4.1.15 VS4 type pump 24
4.1.16 VS5 type pump 25
4.1.17 VS6 type pump 25
4.1.18 VS7 type pump 25
4.2 Units and requirements that govern 26
5. Basic designation 26
5.1 General 26
5.2 Types of pumps 31
5.3 Pressure casings 32
5.4 Nozzles and pressure connections of the housing 36
5.4.1 Opening size of the housing 36
5.4.2 Suction and discharge nozzles 36
5.4.3 Auxiliary connections 36
5.5 External forces and moments at the nozzle..... 38
5.6 Rotors 46
5.7 Wear rings and operating clearances 48
5.8 Mechanical closures 50
5.9 Dynamics 54
5.9.1 General 54
5.9.2 Torsion analysis 54
5.9.3 Vibration 55
5.9.4 Balance 63
5.10 Bearings and bushings 65
5.10.1 Bearings 65
5.10.2 Bearing box 67
5.11 Lubrication 70

5.12 Materials 71
5.12.1 General 71
5.12.2 Foundry 75
5.12.3 Welding 75
5.12.4 Low temperature 77
5.13 Identification plates and rotation arrows 79
6 Accessories 79
6.1 Conductors 79
6.2 Couplings and protectors 84
6.3 Base plates 86
6.4 Instrumentation 89
6.4.1 Meters 89
6.4.2 Vibration, position, and temperature 89
6.5 Pipes and fittings 90
6.5.1 General 90
6.5.2 Auxiliary process fluid piping 91
6.5.3 Cooling water pipes 92
6.6 Special tools 92
7 Inspection, testing and preparation for transportation 92
7.1 General 92
7.2 Inspection 93
7.2.1 General 93
7.2.2 Material Inspection 94
7.3 tests 95
7.3.1 General 95
7.3.2 Hydrostatic test 95
7.3.3 Performance test 98
7.3.4 Optional tests 101
7.4 Preparation for shipment 102
8 Types of specific pumps 104
8.1 Single-stage radial pumps 104
8.1.1 Horizontal (Type OH2) 104
8.1.2 Vertical line (Type OH3) 104
8.1.3 Driven integral gear (Type OH6) 105
8.2 Among the bearings of the pumps (types BB1 to BB5)..... 105
8.2.1 Pressure housing 105
8.2.2 Rotor 106
8.2.3 Service areas 106
8.2.4 Dynamics 107
8.2.5 Bearings and bushings 109
8.2.6 Lubrication 111
8.2.7 Tests 112
8.2.8 Preparation for shipment 112
8.3 Vertically suspended pumps (types VS1 through VS7)..... 113
8.3.1 General 113
8.3.2 Pressure casings 113
8.3.3 Rotors 113
8.3.4 Wear parts and operating clearances 113
8.3.5 Dynamics 114
8.3.6 Bearings and Rollers 114

8.3.7 Lubrication 114
8.3.8 Accessories 116
8.3.9 Tests 117
8.3.10 Individual diffuser case (VS1) and volute pumps (VS2)... 117
8.3.11 Single casing axial flow pumps (VS3) 119
8.3.12 Single body drive shaft (VS4) and cantilever pumps (VS5). 119
8.3.13 Double casing diffuser (VS6) and volute pumps (VS7)……. 120
9 Seller data 121
9.1 General 121
9.2 Proposals 122
9.2.1 General 122
9.2.2 Drawings 123
9.2.3 Technical Data 123
9.2.4 Curves 127
9.2.5 Options 127
9.3 Contract data 127
9.3.1 General 127
9.3.2 Drawings and technical data 127
9.3.3 Progress reports 128
9.3.4 List of recommended parts and spare parts 128
9.3.5 Data manuals 129

Annex A-(Informative)-Specific speed and suction specific speed. 130
Annex B (regulatory) Cooling water and system diagrams lubrication 131
Annex C (Regulatory) Hydraulic Energy Recovery Turbines..... 143

C.1 Scope 143
C.2 Terminology 143
C.3 Design 143
C.3.1 Characteristics of fluids 143
C.3.2 Download system seal 143
C.3.3 Speeding trip 143
C.3.4 Dual conductors 143
C.3.5 Generators 143
C.3.6 Butterfly valves 145
C.3.7 Bypass valves 145
C.3.8 Safety valves 145
C.4 Tests 147

Annex D (Regulatory) Standard Motherboard…… 149
Annex E (Informative) Inspector's checklist 151
Annex F (Regulatory) Criteria for Pipe Design..... 154

F.1 Horizontal pumps 154
F.2 Vertical line pumps 155
F.3 Nomenclature 156
F.4 examples of problems 157
F.4.1 Example 1A (SI units)..... 157
F.4.2 Example 2A (SI units) 161

F.4.3 Example 1B (US system units)..... 164
F.4.4 Example 2B (US system units)……..... 168

Annex G (Informative) Class selection guide materials..... 172
Annex H (Regulatory) Materials and material specifications for parts of the bomb 174
Annex I (Regulatory) Lateral Analysis 185

I.1 Lateral analysis 185
I.1.1 General 185
I.1.2 Natural frequency 185
I.1.3 Separation and cushioning margins 186
I.1.4 Analysis of the damped response imbalance 187
I.1.5 Admissible displacement 187
I.2 Store verification of the dynamic characteristics of the rotor... 190
I.3 Documentation 191

Annex J (Regulatory) Procedure for the determination of imbalance residual . 193

J.1 Scope 193
J.2 Definition 193
J.3 Maximum allowed residual imbalance 193
J.4 Residual check imbalance 193
J.4.1 General 193
J.4.2 Procedure 193

Annex K (Regulatory) Jump camera seal illustrations..... 199
Annex L (Informative) Drawing requirements and supplier data... 200

L.1 Scope 200
L.2 Description 203
Pump 203
L.2.2 Motor 208

Annex M (Informative) Summary of test data…… 211
Annex N (Informative) Data sheet of the pump. 215

Bibliography 232

Preface

The Publications API can be used by anyone who wishes to. do it. Every effort has been made by the Institute to ensure accuracy and reliability of the data contained in them, however, the Institute does not make no representation, warranty or guarantee in relation to this publication and expressly waives any obligation or responsibility for losses or damages as a result of its use or for the violation of any regulation federal, state or municipal with which this publication may enter into conflict. Suggested revisions are invited and must be submitted to the director of normalization, American Petroleum Institute, 1220 L Street, NW, Washington, DC 20005. Please note that there will be no API supplements. Standard 610, ninth edition is published and sold periodically. Please contact in contact with your authorized distributor of the API publications for get more information.

INTRODUCTION

This standard was developed from API 610 Standard, 8

1995 edition, with the intention that the 9

The API 610 edition will be the same as this International Standard.

Users of this standard must be aware that it will be necessary carry out more or different requirements of the individual applications. This International Standard is not intended to inhibit a donor provider, or the buyer to accept alternative equipment or engineering solutions for the individual application. This may be particularly appropriate when there is innovative or developing technology. When an alternative is offered, the the supplier must identify any variation from this international standard, and provide details.

Annex A specifies the calculations for specific speed and speed. specific to suction.

Annex B contains schematic drawings of the water systems of cooling and lubrication.

Annex C specifies the requirements for hydraulic energy recovery turbines.

Annex D specifies the requirements for standard motherboards.

Annex E contains a checklist for an inspector.

Annex F specifies criteria for pipe design.

Annex G guides the selection of the type of material.

Annex H specifies requirements and provides guidance on the selection of materials.

Annex I specifies the requirements for lateral analysis.

Annex J specifies requirements to determine residual imbalance.

Annex K contains the jump seal chamber illustrations.

Appendix L contains forms that can be used to indicate drawing. supplier and the requirements data.

Annex M contains forms that can be used for the protocol of data essay.

Annex N contains data sheets that buyers are encouraged to use.

This standard requires the buyer to specify certain details and characteristics.

A bullet point (•) at the beginning of a paragraph indicates that either a decision or more information from the buyer is required. For more information you must appear in the data sheets (see the example in Annex N) or indicate in the request for quote and purchase order.

In this International Standard, when possible, system units are include in parentheses to obtain information

The centrifugal pumps of natural gas, petroleum, petrochemicals and the industries

1 Scope

This international standard specifies the requirements for centrifugal pumps. including pumps working in reverse as recovery turbines of hydraulic energy, for use in petroleum products, petrochemicals and process services for the gas industry. Does not cover seal-less pumps. This International Standard applies to radial pumps, between bearings, pumps and vertically suspended pumps (see Table 1). Clause 8 is applies to certain types of pumps. All other clauses of this International standards apply to all types of pumps. The figures of 4.1 they show the different types of specific pumps and their denominations assigned to each specific type.

Table 1 -Classification of identification of the type of pump

BOMBAS CENTRIFUGAS	Radials	Elastic coupling	Horizontal	With feet	OH1
				Supported axis	OH2
			Vertical in line with support of bearing		OH3
		Rigid coupling	Vertical in line		OH4
		Coupling closed	Vertical in line		OH5
			High speed oriented integrally		OH6
	Among bearings	1- Y 2- Etapa	Axially divided		BB1
			Radially divided		BB2
		Multistage	Axialmente divided		BB3
			Radially divided		BB4
					BB5
	Vertically suspended	Simple case	download to through the column	Difusor	VS1
				Volute	VS2
				Axial flow	VS3
			Downloads separated	Aligned axis	VS4
				Cantilever beam	VS5
		Double case	Diffuser		VS6
			Volute		VS7
Note: figure of the various types is indicated in 4.1					

2 Regulatory references

The following reference documents are essential for the application. From this document. For dated references, only the cited edition applies. For references without a date, the latest edition of the document applies. reference (including any modifications).

IEC 60034, Rotating electrical machines - Part 1: Evaluation and performance.

IEC 60079, Electrical apparatus for explosive gas atmospheres.

ISO 7, pipe threads that are sealed with gaskets in the threads.

ISO 228-1, Thread for pipes where the adjusted pressure is not applied in the filets - Part 1: Designation, dimensions, and tolerances.

ISO 261, ISO general purpose metric screws - General Plan.

ISO 262, general-purpose metric threads ISO - Selected sizes of screws, bolts, and nuts.

ISO 281, Bearings - dynamic load capacities and life duration.

ISO 286 (all parts), the ISO system of limits and fits.

ISO 724, general purpose metric threads ISO - Basic dimensions.

ISO 965 (all parts), general purpose metric threads ISO - Tolerances.

ISO 1940-1, Mechanical vibrations - Quality requirements for balancing Rigid rotors - Part 1: Determination of the permissible residual imbalance.

ISO 4200, smooth end steel pipes, welded and seamless tubes General of dimensions and masses per unit of length.

ISO 5753, Bearings - Internal radial play.

ISO 7005 -1, bridas Metálicas - Parte 1: Bridas de Acero.

ISO 7005 -2, Metal Flanges - Part 2: Cast Iron Flanges.

ISO 8501 (all parts), Preparation of steel substrates before application of paints and related products – Visual Assessment of the surface cleaning.

ISO 9906, rotodynamic pumps - performance acceptance tests hydraulic - Degrees 1 and 2.

ISO 10436, petroleum and natural gas industries - steam turbines for use general for refinery service.

ISO 10438 (all parts), lubrication, the seal shaft and control - oil systems for special applications.

ISO 10441, Oil and flexible couplings for natural gas industries for the transmission of mechanical energy – Special purpose applications.

ISO 11342, mechanical vibrations - Methods and criteria for balancing mechanic of the flexible rotors

ISO 14691, oil and natural gas industries - flexible couplings for mechanical power transmission - General purpose applications.

ISO 15649, petroleum and natural gas industries - Pipes.

ISO 21049, Pumps - Shaft sealing systems for centrifugal pumps and rotatives.

EN 287, welder tests – Fusion welding.

EN 288, Specification and qualification of welding procedures for the metal materials.

EN 13445 (all parts), Unfired pressure vessels.

ABMA 7, axis and the housing accommodates metric radial contact balls and the roller bearings.2)

AGMA 9000, flexible couplings - Classification of imbalance potential.3)

AGMA 9002, internal diameter and slots for flexible couplings (in inches).

API 5L, Specification for line pipe.

API 541, Squirrel cage induction motor rope form - 250 horsepower and bigger.

API 611, General purpose steam turbines for refinery service.

API 670, non-contact vibration and axial position control system.

API 671, couplings for special uses for refinery service.

API 677, general purpose gears for refinery service

API RP 500, Classification of Locations for Electric Installations in the oil facilities.

API RP 686, machinery installation and installation design.

ASME B1.1, unified inch threads, the UN and UNR thread form.

ASME B15.1, mechanical power transmission devices.

ASME B16.1, cast iron pipes flanges and flanges.

ASME B16.5, Pipe flanges and fittings (steel).

ASME B16.11, forged steel fittings, welding socket and threaded.

ASME B16.42, ductile iron flanged pipe and flange fittings.

ASME B16.47, large diameter steel flanges.

ASME B17.1, Wedges and main seats.

ASME Boiler and Pressure Vessel Code, Section V, "the examination does not destructive

ASME Boiler and Pressure Vessel Code, section VIII, "Pressure Vessels" pressure

ASME Boiler and Pressure Vessel Code, Section IX, "Welding Industrial ratings.

AWS D1.1, Structural Welding Code - Steel.6)

DIN 910, High-strength hexagonal head screw plugs

HI 1.3, Centrifugal pumps - Design and application

HI1.6, centrifugal pump - Tests

HI2.6, Vertical Pump – Tests

IEEE 841, Standard for the Oil and Chemical Industry - Serious Duty totally enclosed fan-cooled (TEFC) induction squirrel cage motors Up to 370 kW (500 HP) 0.9).

MSS-SP-55, Quality standard for steel casting for valves, flanges and pipe fittings and other components - Visual method.10)

NACE MR0175, Sulfide Stress Cracking Efforts on Metallic Materials resistant for oil equipment.

NFPA 70, National Electrical Code. 12)
SSPC SP 6, Surface preparation specification.13)

1) Comité Europeo de Normalización, 36, rue de Stassart, B-1050 Bruselas, Bélgica
2) Asociación Americana de Fabricantes de rodamientos, 2025 M Street, NW, Suite 800, Washington, DC 20036, U.S.
3) American Gear Manufacturers Association, 1500 King Street, Suite 201, Alexandria, VA 22314, USA.
4) Instituto Americano del Petróleo, 1220 L Street NW, Washington, DC 20005 a 4070, EE.UU.
5) American Society of Mechanical Engineers, Three Park Avenue, New York, NY 10016-5990, USA.
6) Sociedad Americana de Soldadura, 550 North LeJeune Road, Miami, FL 33136, EE.UU.
German Institute for Standardization, Burggrafenstrasse 6, Berlin, Germany D-10787
8) Hydraulic Institute, 9 Sylvan Way, Parsippany NJ, 07054, EE.UU.
9) Institute of Electrical and Electronics Engineers, 445 Hoes Lane, Piscataway, NJ 08855 to 1331
10) Manufacturers Society of Standardization of the Valve and Fittings Industry Inc., 127 Park Street NE, Vienna VA 22180-4602, USA
11) National Association of Corrosion Engineers, 1440 South Creek Drive, Houston, TX 77084 to 4906, USA.
12) National Fire Protection Association, 1 Batterymarch Park, Quincy, MA 02269-9101, USA.
13) The protective coatings company, 40 24th Street, 6th floor, Pittsburgh, PA 15222-4643, USA.

3 Terms and Definitions

For the purposes of this document, the following terms and definitions.

3.1 Axially divided

Divide with the parallel director to the central line of the axis

3.2 Barrel pump

Horizontal double casing pump

3.3 Barrier fluid

Fluid, at a pressure higher than the sealing process pressure, introduced between dual pressurized (double) mechanical seals for isolation completely the process liquid pump from the environment.

3.4 Best Efficiency Point (BEP)

Flow rate at which a pump achieves its maximum efficiency.

3.5 liquid sealant

Fluid, at a pressure lower than the sealing process pressure, which is use as a lubricant or cushion between double (tandem) seals without pressure mechanics

3.6 critical speed

Rotational axis speed at which the rotor-bearing-support system It is in a state of resonance.

3.7 critical speed, dry

Critical rotor speed is calculated assuming that there are no fluid effects, that the rotor is only accepted in its bearings and that the bearings are of rigidity infinite

3.8 critical speed, wet

Critical rotor speed calculated taking into account the support and the damping produced by the action of the additional pumping liquid inside from internal clearance to operating conditions and allowing flexibility and cushioning within the bearings.

3.9 reference elevation

Elevation to which the NPSH values are referred (see 3.28).

3.10 double cover

Type of pump construction in which the pressure casing is independent of the pumping elements (such as, diffuser, diaphragms, bowls and the inner covers of volutes) that appear in the box.

3.11 train components

Elements of the equipment used in series to drive the pump.

Examples of engine, gears, turbines, motors, hydraulic transmission, clutch.

3.12 of element
Assembly of the rotor, plus the internal stationary parts of a pump centrifuge

3.13 element, cartridge type
Assembly of all the pump parts except for the casing.

3.14 hydraulic energy recovery turbine
Turbomachine designed to recover energy from a fluid flow

3.15 hydrodynamic bearings
Bearings that use the principles of hydrodynamic lubrication

3.16 Maximum allowed speed
Higher rotation speed at which the manufacturer's design allows the continuous operation

3.17 maximum allowable temperature
Maximum continuous temperature for which the manufacturer has designed the pump (or any part to which it is referred to as a period) when handling the liquid specified at the specified maximum working pressure

maximum allowable working pressure PSMA
working pressure MAWP
Maximum continuous pressure for which the manufacturer has designed the pump (or any part to which the term refers) when manipulating the liquid specified at the specified maximum operating temperature

3.19 Maximum continuous speed
Highest rotation speed at which the already constructed pump is capable of continuous operation with the specified liquid to any of the specified operating conditions

3.20 maximum discharge pressure
Maximum specified suction pressure plus maximum pressure differential the pump with the furnished impeller is capable of developing when it operates at nominal speed with liquid of normal relative density specified (specific gravity).

3.21 maximum dynamic sealing pressure
Higher pressure than expected in the meetings under any condition specified operation and during startup and shutdown

3.22 maximum static sealing pressure
The highest pressure, excluding pressures encountered during the test. hydrostatic pressure, to which the seals can be subjected while the pump is turn off

3.23 maximum suction pressure
Higher aspiration and pressure to which the pump is subjected during the operation

3.24 minimum allowed speed
Lowest rotational speed (in revolutions per minute) at which the design from the manufacturer allows continuous operation

3.25 stable flow continues minimum
Low flow at which the pump can operate without exceeding the limits of vibration imposed by the present International standard

3.26 continuous minimum thermal flow
Flow rate at which the pump can operate without its functioning is affected by the increase in the temperature of the pumped liquid

3.27 minimum design temperature of the metal
Average lowest temperature of metal (through the thickness) that is expected in the service, including operational disorders, self-cooling and the temperature of the surrounding environment.

3.28 net positive suction head NPSH
Absolute total suction pressure is determined at the suction nozzle and is referred to the reference elevation, minus the vapor pressure of the liquid, in units of meters (feet) of the head of the pumped liquid

3.29 available net positive suction head NPSHA
NPSH determined by the buyer, with the pumping system with the liquid at the nominal and normal pumping flow temperature

3.30 required net positive suction head NPSHR
NPSH value that translates into a 3% head loss (first stage in the head a multi-stage pump) determined by the supplier of the tests with water

3.31 nominal pipe size NPS
Designation, generally followed by a size designation number, which approximately corresponds to the outer diameter of the tube, expressed in inches

3.32 normal operating point
Point at which the pump is expected to operate under normal conditions process

3.33 pieces of normal wear
Parts normally restored or replaced in each pump overhaul

Examples of carrying rings, inter-stage bushings, balancing device, sleeve of throat, seal faces, bearings and joints.

3.34 observed
Inspection or test in which the buyer is notified of the date of the inspection or testing and the inspection or testing is carried out as planned if the buyer or their representative are not present.

3.35 oil mist lubrication
Lubrication provided by an oil mist produced by atomization in a central unit and is transported to the bearing housing, or casings, by compressed air.

3.36 lubrication by pure oil mist
(Dry sump systems) in which the mist both lubricates the bearing(s) and purges. from the housing and there is no oil level in the sump

3.37 lubrication purge by oil mist
Systems (wet sump) in which the mist only purges the housing of the bearing

3.38 operating region
Portion of the hydraulic coverage of a pump on which the pump operates

3.39 operating region, permissible
Part of a hydraulic coverage pumps on which it is allowed that the pump operates, based on vibrations at the upper limit of this standard or of temperature increase or of another type, specified by the manufacturer

3.40 operating area, is preferred
Part of the hydraulic coverage of a pump on the vibration of the pump is within the limit of the basis of this International standard

3.41 cantilever pump
Pump whose impeller is cantilevered from its bearing assembly

3.42 pressure casing
Composed of all the pressure that contains stationary parts of the pump, including all nozzles, seal glands, seal chambers, and other parts connected with exclusion of stationary and rotating members of joints mechanics

3.43 buyer
Owner or owner's agent, who issues the order and specifications for the seller

3.44 radially game
Divide with the perpendicular director that is joint to the central line of the axis.

3.45 nominal operating point
Point at which the supplier certifies that the pump performance is within the tolerances indicated in this International Standard, normally the specified operating point with the highest flow rate.

3.46 relative density, specific weight
Property of a liquid expressed as the ratio of the density of the liquid to the water at 4 °C (39.2 °F)

3.47 rotor
Assembly of all rotating parts of a centrifugal pump

3.48 must
It is used to indicate a requirement

3.49 should
It is used to indicate a recommendation.

3.50 specific speed: relative flow index, total height and speed of rotation of similar geometry pumps (see Annex A)

3.51 on-call service
Normally inactive or idle part of the equipment that is capable of immediate automatic or manual start-up and continued operation

3.52 specific suction speed
Flow relation index, NPSHR and rotational speed for pumps of similar geometry (see Annex A)

3.53 throat bud
Device that forms a narrow restrictive gap around the cuff (or shaft) between the hub and the impeller

3.54 total reading, total indicated TIR shift
Difference between the maximum and minimum readings of a clock or a device similar, the tracking of a face or cylindrical surface during a complete revolution of the controlled surface

NoteTo obtain a perfectly cylindrical surface, the reading of the
The indicator implies an eccentricity equal to half of the reading. On one side the reading of the indicator is perfectly flat, giving an output from the square equal to the reading. If the diameter in question is not the perfect interpretation cylindrical or flat the meaning of the IRR is more complex and can represent ovality or lobulation.

3.55 travel speed
Speed at which the emergency speed excess device independent operates to turn off a variable speed motor or the speed corresponding to the synchronous speed of a motor at the maximum frequency of supply.

3.56 responsibility of the unit
The responsibility for the coordination aspects of documentation, delivery and technique of the equipment and all auxiliary systems included in the scope of application of the order

The technical aspects that must be considered include, but are not limited to, limited by factors such as power requirements, speed, rotation, general arrangement, couplings, dynamics, lubrication, system of sealed, the material testing reports, instrumentation, piping, the compliance with specifications and component testing.

3.57 supplier vendor
Manufacturer or the manufacturer's agent who supplies the equipment and is usually responsible for service support

3.58 vertical line pump
Vertical shaft pump whose suction and discharge connections have a common central line that crosses the axis

NOTE: The pump controller is usually mounted directly in the bomb.

3.59 vertically suspended pump
Vertical shaft pump whose final liquid is suspended from a column and plate of assembly

The pump transport unit is generally submerged in the pumped liquid.

3.60 witness
Inspection or test in which the buyer is notified of the timing from inspection or testing and a waiting point is placed in the inspection or Test until the buyer or their representative is present.

4 CLASSIFICATION AND DESIGNATION
4.1 PUMP DESIGNATIONS

4.1.1 Type of pump OH1
Single stage radial pumps with legs will be designated as pump type OH1. (Does not meet all the requirements of this International Standard, see 5.2.)

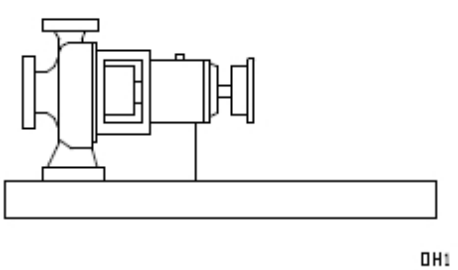

Figure 1 — Pump type OH1

4.1.2 OH2 pump type

Single stage radial pumps mounted on a central line will be designated OH2 type pump. They have a single bearing housing to absorb all the forces imposed on the pump shaft and maintain the rotor position during operation. The pumps are mounted on a base plate.
and it is formed flexible coupled to its conductors.

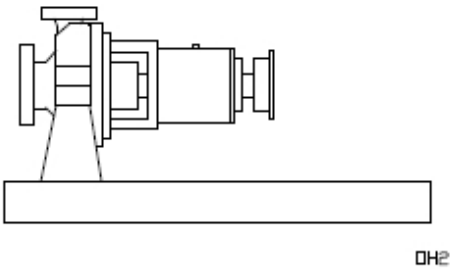

Figure 2 — Pump type OH2

4.1.3 Type of pump OH3

Vertical inline single-stage radial pumps with brackets separate support will be designated as OH3 pump type.
They have an integral with the bearing housing of the absorber pump all the rotor loads. The conductor is mounted on a support member of the pump. The pumps and their drivers are coupled with flexibility.

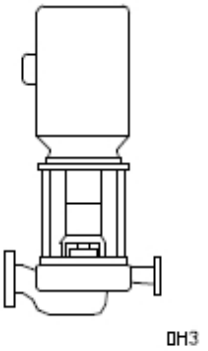

Figure 3 — Pump type OH3

4.1.4 Type of pump OH4

In the line of single stage vertical rigid radial pumps coupled will be designated type of pump OH4. Rigidly coupled Pumps have their shaft rigidly coupled to the motor shaft. (Does not comply with all the requirements of this International Standard, see 5.2.)

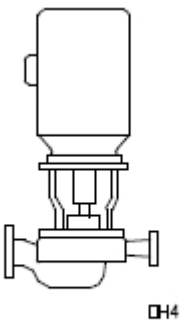

Figure 4 — Pump type OH4

4.1.5 OH5 pump type

In the line of single stage vertical close coupled radial pumps OH5 type pumps will be designated. Close-coupled pumps. boosters are mounted directly on the motor shaft. (Not compliant with all the requirements of this international standard, see 5.2.)

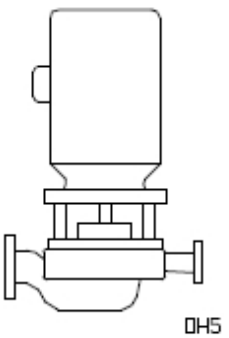

Figure 5 — Pump type OH5

4.1.6 Type of pump OH6

Single stage radial pumps with high-speed integral gears they will be designated as OH6 type bombs. These bombs have a speed of increase of a single-piece gearbox with the pump. The impeller is mounts directly to the output of the shaft reducer. There is no coupling between the gearbox and the pump, however, the gearbox is coupled elastically to its driver. The bombs can be oriented vertically or horizontally.

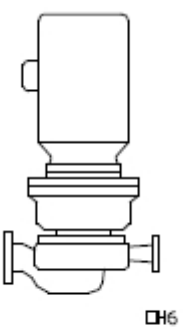

Figure 6 — Pump type OH6

4.1.7 BB1 pump type

Axial division of one and two stages between-bearings of the pumps will be designated type of pump BB1.

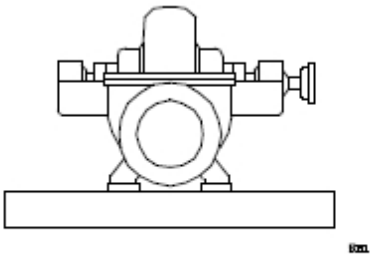

Figure 7 — Pump type BB1

4.1.8 BB2 type pump

Radially dividing one and two stages between the bearings of the pumps will be designated type of pump BB2.

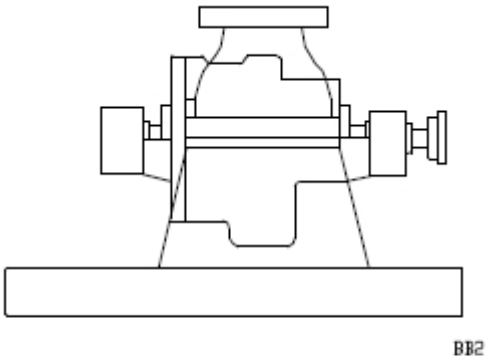

Figure 8 — Pump type BB2

4.1.9 BB3 pump type

Multistage axially split between bearing pumps will be designated
BB3 type pump.

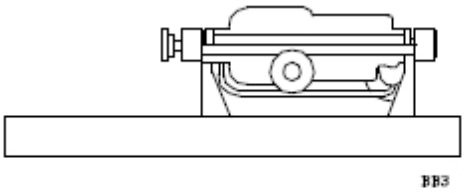

Figure 9 — Pump type BB3

4.1.10 BB4 pump type

Only the multi-stage radial split box between the bearings of the pumps will be designated type of pump BB4. These pumps are also called pumps of annular section, segment ring pumps or cantilever pumps. These pumps have a potential leak along the ACH segment.

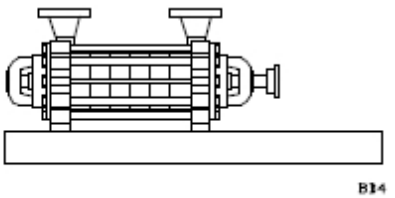

Figure 10 — Pump type BB4

4.1.11 BB5 pump type

Make a double radial split casing through several stages of ball pumps. designated type of pump BB5.

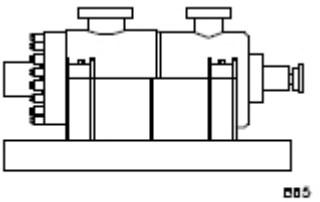

Figure 11 — Pump type BB5

4.1.12 Type of pump VS1

Wet well, vertically suspended, single casing diffuser pumps with discharge through the column will be designated as type VS1 pump.

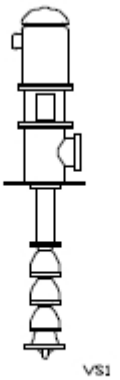

Figure 12 — Pump type VS1

4.1.13 Type of pump VS2

Wet pit, vertically suspended, single unit volute pumps
with the discharge through the column, it is designated as VS2 Type pump.

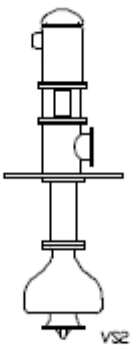

Figure 13 — Pump type VS2

4.1.14 Type of pump VS3

Wet well, vertically suspended, single axial flow pumps
unit with discharge through the column are designated Type VS3.

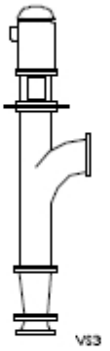

Figure 14 — Pump type VS3

4.1.15 Type of pump VS4

Vertical suspension, axle alignment The sump pumps driven
single casing volute is designated as VS4 type pump.

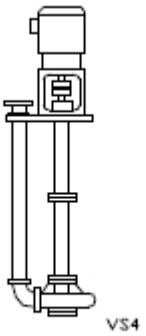

Figure 15 — Pump type VS4

4.1.16 Type of pump VS5

The vertically suspended cantilever sump pumps are designated as type of pump VS5.

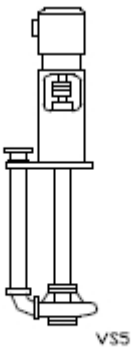

Figure 16 — Pump type VS5

4.1.17 VS6 pump type

Make double casing diffuser pumps suspended vertically will be designated type of pump VS6.

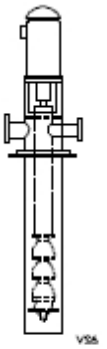

Figure 17 — Pump type VS6

4.1.18 Type of pump VS7

Double casing vertically suspended volute pumps will be designated type of pump VS7.

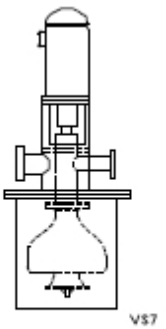

Figure 18 — Pump type VS7

4.2 Units and requirements that govern

• 4.2.1 Drawings and dimensions maintenance of pumps will be in units If in usual US units. The use of an ISO standard.
Data sheet standards (for example, see Annex N, Figure N.1) indicate the SI units are used. The use of a U.S. customary data sheet (for For example, annex N, figure N.2) indicates that units from the system will be used.

4.2.2 When the specific requirements of a particular type of pump in the clause 8 of conflict with any other clause, the requirements of the clause 8 must govern.

5 BASIC DESIGN
5.1 GENERALITIES

5.1.1 The equipment (including auxiliaries) covered by this standard must be designed and built for a minimum lifespan of 20 years (except for parts of normal wear identified in Table 18) and at least 3 years of uninterrupted operation. It is acknowledged that these requirements are that the design and service criteria or the duty of gravity, operational error or inadequate maintenance can result in a machine not meeting these criteria.
The term "design" will apply only to the parameters or characteristics from the equipment supplied by the manufacturer. The term 'design' should not be use in the consultation or buyer specifications because it can create confusion in understanding the order.

The supplier shall assume responsibility for the unit of all the equipment and all auxiliary systems included in the scope of application of the order.

• 5.1.3 The buyer must specify the working conditions, the properties of liquids, alterations in the place and public services conditions, including all the data that appears on the data sheet of process (page 1 of the data sheets in Annex N). The buyer must specify if the pump is designed to be used as they will apply an HPRT and Annex C.

5.1.4 The equipment must be able to operate at normal points of operation and classification and any other intended conditions of use specified by the buyer.

• 5.1.5 Flammable or hazardous liquids must be identified. by the buyer.

5.1.6 The pumps must be capable of at least one increase of the 5% head under nominal conditions by replacing the impeller(s) with a larger diameter or different hydraulic design, the capacity of variable speed or the use of a blank space stage.

NOTE This requirement aims to prevent a change in the selection caused by the refinement of hydraulic requirements after the The pump has been purchased. It is not intended to accommodate the capacity of future expansion. If there is a future operational requirement, it must specify separately and it is considered in the selection.

5.1.7 The pumps must be capable of operating for at least until the maximum continuous speed. The maximum continuous speed will be:

a) equal to the speed corresponding to the synchronous speed at the maximum frequency of electricity supply motors;
b) at least 105% of the nominal speed for speed pumps variable, y cualquier ahorradores de bomba de velocidad fija o salvado por una pump whose driver is capable of exceeding the nominal speed.

5.1.8 Variable speed pumps will be designed for the excursions to travel speed without damage.

5.1.9 The conditions in the sealing chamber necessary to maintain a stable film on the faces of the seal, including temperature, pressure, and the flow, as well as provisions to ensure the adequacy of the design for the sealed against atmospheric pressure when the pumps are inactive in the vacuum service will be agreed upon by the pump supplier and the manufacturer of the seal, approved by the buyer, and indicated on the data sheet.

NOTEProvision for sealing against atmospheric pressure in the service of vacuum is especially important when handling liquids close to their pressure of vapor (such as liquefied petroleum gases).

5.1.10 The manufacturer must specify in the NPSHR sheets based on water (at a temperature of less than 65°C (150°F)) at nominal flow rate and the nominal speed. A reduction or correction factor for different liquids of water (such as hydrocarbons) will not apply.
The buyer must consider an appropriate NPSH margin in addition to the Specified NPSHR. A margin of NPSH is the excess that exists over NPSHR of the pump. Generally, it is desirable to have a margin of NPSH operating that is sufficient in all flows (continuous stable flow) minimum for the expected maximum operating flow) to protect the pump the damage caused by flow recirculation, separation, and cavitation. The The seller should be consulted about the NPSH margins recommended. for the specific type of pump and the intended service.

When establishing NPSHA, the buyer and seller must acknowledge the relationship between the minimum stable and continuous flow of specific suction velocity the pump. In the generally stable continuous flow, minimum, expressed as a percentage of the flow at the best efficiency point of the pump increases to medida que la velocidad específica de succión aumentos. Sin embargo, otros factors such as pump energy level and hydraulic design, the liquid flooded, and the NPSH margin also affects the pump capacity to function satisfactorily over a wide range of flow rates. Design of the

pump that operation directions of low flow is a technology in evolution, and the selection of specific suction speed levels NPSH margins must take into account the current industry and experience suppliers.

Unless specified otherwise, the reference elevation will be the central line of the axis for horizontal pumps, the central suction nozzle for vertical line pumps, and the top of the pump base vertically suspended.

- **5.1.11 The specific suction velocity of the pump will be calculated from** compliance with Annex A and, if specified, limited as indicated in the technical sheet.

5.1.12 The pumps that handle liquids more viscous than water will have their behavior in water corrected in accordance with HI 1.3. The factors The corrections will be presented with curves from the proposed test.

- **5.1.13 The pumps that have the stable head / flow curves (increase** continuation of the cutting head) for all Applications are required and if the parallel operation is not specified. If it is not specified parallel operation, the increase in the nominal head of the pump closure will be at least 10%. If a discharge opening is used as a in order to provide a continuous increase at the close, this use will be noted. in the proposal.

5.1.14 The pumps must have a preferred operating region of 70% to 120% of the pump's best flow efficiency as furnished. Flow rating must be within the range of 80% to 110% of the best flow efficiency of the pump as it was furnished.
Set limits for the preferred operating region and the location of the flow. nominal is not intended to lead to the development of additional sizes of small bombs or prevent the use of specific high-speed bombs. Small pumps, which are known to operate satisfactorily in the flows outside the specified limits, and high-speed pumps specific, which can have a narrower preferred region of operation specified, must be offered in your case, and from your region of preferred operation is clearly shown in the proposal curve. The specific speed of the pump will be calculated in accordance with Annex A.

5.1.15 The point of maximum pump performance as provided is preference between the nominal point and the normal point.

- **5.1.16 If specified, the supplier must provide both pressure** maximum sound and the data of the acoustic power level by band of eighth for the team. The control of the sound pressure level (SPL) of all the furnished equipment will be a joint effort of the buyer and the seller It has the responsibility of unity. The team provided by the supplier must comply with the specified maximum allowable sound pressure level. ISO 3740, ISO 3744 and ISO 3746 can be consulted for guidance.

5.1.17 Pumps with heads of more than 200 m (650 feet) per stage and with more than 225 kW (300 hp) per stage may require special arrangements to reduce the frequency of blade passage vibrations and the vibrations of low frequency in the reduced flows. Due to these pumps, the radial play between the tongue diffuser of paddles or in spiral (spur) and the periphery of the blade the impeller will be at least 3% of the blade maximum radius impeller tip para los diseños de difusor y al menos 6% del radio máximo punta de la blade for spiral designs. The blade maximum radius driver tip is the radio of the largest turbine that can be used within the casing of the bomb (see 5.1.6). Percentage settlement is calculated as follows:

$$P = 100(R_3 - R_2)/R_2$$

P is the distance per hundred;
R_3it is the radius of the tip of the spiral or the inlet of the diffuser;
R_2it is the maximum driver tip radio sheet.

The pump drives referred to in this clause will not be modified. after the test to correct the hydraulic performance filling insufficient, oversupply or cut 'V' without notifying the buyer before its Shipment. All these modifications will be documented according to 9.3.4.1.

5.1.18 Pumps operate above 3,600 rpm and the absorption of more than 300 kW (400 HP) per stage may even require larger distances and other special construction features. For these pumps, the specific requirements must be agreed upon between the buyer and the seller. taking into account the actual operational experience with the specific types of pump.

- The need for refrigeration must be agreed upon by the buyer.

and the seller. One of the plans in Annex B will be selected. The cooling system must be suitable for operation with the type. of refrigerant, the pressure and temperature specified by the buyer. The the manufacturer must specify the necessary flow rate. To avoid condensation, the minimum inlet water cooling temperature for boxes of Bearings must be above ambient temperature.

5.1.20 jackets, if provided, must have clean connections towards disposed so that the entire passageway can be cleaned mechanics, blushed and drainage.

5.1.21 Jacket systems, if provided, will be designed to prevent the process flow is filtered in the jacket. Jacket passages should not open the case at the joints.

5.1.22 The cooling water systems must be designed for the next conditions on the water side:

	SI Units	US Units of the System
Speed over surfaces of heat exchange	1.5 m/s to 2.5 m/s	5 ft/s to 8 ft/s
The maximum service pressure authorized (PSMA), measure	700 kPa (7 bar)	100 psi
Test pressure (> 1.5 PSMA), indicator	1,050 kPa (10.5 bar)	(150 psi)
Maximum pressure drop	100 kPa (1 bar)	(15 psi)
Temperature maximum of entry	30 °C	(90 °F)
Temperature maximum of exit	50 °C	(120 °F)
Increase of temperature maximum	20 K	(30 °R)
Dirt factor of the side of the water	0.35 m2·K/kW	(0.002 hr-ft²-°R/Btu)
Corrosion tolerance of the casing (no tubes)	3.0mm	(0.125 in)

Measures will be taken for complete ventilation and drainage of the system. criterion for the speed over heat exchange surfaces is intended to minimize water edge pollution.

5.1.23 The layout of the equipment, including pipes and auxiliaries, is will be jointly prepared by the buyer and the seller. The agreement will provide appropriate clearance areas and safe access for the operation and maintenance.

- 5.1.24 Engines, electrical components, and electrical installations must to be suitable for the classification of the area (class, group, and the division or zone) specified by the buyer and must meet the requirements of the sections applicable from the IEC 60079 standard or the NFPA 70 standard, articles 500, 501, 502, 504 and 505, as well as the specified local codes and furnished to buyer request.

5.1.25 oil reservoirs and boxes that enclose the lubricated parts in movement, such as bearings, shaft seals, highly polished parts, instruments and control elements will be designed to minimize contamination from humidity, dust, and other foreign materials in the operating periods and idleness.

5.1.26 The entire equipment must be designed to allow for maintenance fast and economical. Most important parts, such as the housing components and bearing boxes must be designed and manufactured to ensure a precise alignment on the assembly. This can be achieved by the use of assuming, spikes or keys.

5.1.27 Vertical suspended pumps and integral pumps
Directed, pumps will be designed to allow the extraction of the rotor element. interior or without disconnecting the suction or the discharge pipe or moving the controller.

5.1.28 The pump and its driver must perform in their test benches and on its permanent basis in the acceptance criteria specified in 5.9.3. After installation, the performance of the combined units will be the articulation of the responsibility of the buyer and the seller that has the responsibility unit.

5.1.29 spare parts, pieces, and everything for the pump and all the auxiliaries furnished must, at a minimum, meet all the criteria of this standard international

5.1.30 Equipment, including all auxiliaries, will be designed for the outdoor installation and the specific site environmental conditions. The the supplier must inform any required protective equipment for the workplace location (i.e., winter preparation for low ambient temperatures, or protection against unusual humidity, dusty or corrosive conditions, etc.

5.1.31 Empernado for pressure pipes must comply with 5.1.31.a) through 5.1.31.f).

a) The thread details will comply with ISO 261, ISO 262, ISO 724, and ISO 965. ASME B1.1.

b) an appropriate separation will be communicated to all bolt locations to allow the use of the power outlet or key box

c) An external hexagonal head bolt is required, less than what is agreed upon. opposite.

d) The anchors must not have a diameter less than 12 mm (0.5 in).

e) Fastening elements (excluding washers and fastening screws without head) will have the degree of the material and the manufacturers' symbols of identification applied to one end of the posts 10 mm (3/8 inches) of diameter and larger for the heads of the screws of 6mm (1/4 in) diameter and larger. If the available space is not sufficient, the symbol the degree can be marked at one end and the identification symbol of the manufacturer marked on the other end. Nails will be marked at the end exposed.

A screw is a headless screw with an interior hexagon in a extreme.

f) Fine metric and UNF will not be used.

5.2 TYPES OF PUMP

The types of pumps in table 2 have special design characteristics and they will be supplied only if specified by the buyer and if the the manufacturer has demonstrated specific application experience. Table 2

list the characteristics that require special consideration for this type of bombs and parentheses shows, to the corresponding clause(s) of this International Standard.

Table 2 - Special design features of certain types of pumps

Type of pump	Functions that require a special consideration
Close coupled (impeller mounted on the shaft of the engine)	a) the construction of the engine (6.1.6, 6.1.7) b) engine bearings and the temperature of deformed by high pumping temperatures c) removal of the seal (5.8.2)
Rigidly coupled vertical in line	a) the construction of the engine (6.1.6, 6.1.7)) b) the stiffness of the rotor (5.6.9) c) The lubricated product guide bearing (5.10.1.1) d) the off-centering of the axis in the seal (5.6.8, 5.8.5)
Cantilevered horizontal feet	a) The nominal pressure (5.3.5) b) Housing support (5.3.11)
Two-stage radials	a) the stiffness of the rotor (5.6.9, 5.6.15)
Double suction cantilever	a) the rigidity of the rotor (5.6.9, 5.6.15)
Box ring section (multistage)	a) Pressure containment (5.3.3, 5.3.10) b) Dismantling (5.1.27)
Built in the mechanical seal (without sleeve of the separable seal)	a) removal of the seal (5.8.2)

5.3 Pressure housings

5.3.1 The maximum discharge pressure will be equal to the maximum suction pressure. more the maximum differential pressure the pump is able to develop when The impeller is operated at the nominal and specific speed. normal relative density (specific weight).

NOTE The basis for the determination of the maximum discharge pressure is a application problem.

- **5.3.2 If specified, the maximum discharge pressure will be increased.** additional differential pressure developed during one or more of the following operating circumstances:

a) the maximum amount of relative density expected under any condition of specified operation.

b) the installation of the maximum diameter impeller and/or the number of stages that the bomb can accommodate.

c) the operation of travel speed.

The buyer must assess the likelihood of the mentioned circumstances. previously what happens before specifying them.
The additional differential pressure developed at the travel speed is normally a momentary excursion to be absorbed by the margin hydrostatics.

5.3.3 The pressure housing will be designed for:

a) operate without leaks or internal contact between rotating and stationary components while simultaneously holding the PSMA (and the corresponding temperature) and the worst case of double combination of the permissible loads of the nozzle of Table 4 applies through each nozzle;

b) pass the hydrostatic test (see 7.3.2).

NOTE The requirement for double nozzle loading is a housing design criterion. pressure. Allowable nozzle loads for pipe designers are the values listed in Table 4. Other factors, such as the support casing or Base plate stiffness affects allowed nozzle loads.

5.3.4 The tensile effort used in the design of the box pressure for any rail partner will not be greater than 0.25 times the minimum load of tensile rupture for the material at the maximum working temperature specified and, by casting, multiplied by the appropriate casting factor as shown in Table 3. The manufacturer must indicate the source of the properties of the material, such as ASTM, as well as the casting factors that are applied in your proposal.

NOTE 1 In general, the criteria in 5.3.3 result of deflection (strain) being the determining consideration in the design of the diaphragm pump. Last to the Tensile or yield strength is rarely the limiting factor.

NOTE 2 for threading, the permissible tensile stress is used for determine the total bolted area based on the hydrostatic load or preload joint. It is recognized that to provide the necessary initial load to achieve a reliable bolted joint, the bolting will have hardened to to produce a tensile strain greater than the design tensile strength. Values in the range of 0.7 times the performance are common.

Table 3 - Foundry Factors

Tipo de NDE	Casting factor
Visual, magnetic particles and/or liquids penetrating	0.8
X-ray point	0.9
Ultrasonic	0.9
complete X-ray	1.0

5.3.5 Except as noted in 5.3.6, the PSMA will be at least the maximum discharge pressure (see 5.3.1 and 5.3.2) plus 10% of the maximum differential pressure, and it cannot be less than:

a) Axial division of one and two stages between bearing pump and vertically suspended single casing pumps: to Score of pressure equal to that of an ISO 7005-2 PN20 cast iron or ISO 7005-1 PN20 steel flange made of a material grade corresponding to that of the pressure casing.

NOTE 1: For the purposes of this provision, ASME B16.1 Class 125 and ASME B16.5 Class 150 is equivalent to the ISO 7005-2 ISO 7005-1 PN20 standard and PN20, respectively.

b) For the rest of the pumps: a minimum gauge rating of 4,000 kPa (40 bar) (600 psi) at 38°C (100°F), or at least ISO 7005-1 PN50.

NOTE 2 The 10% differential pressure margin is intended for increases in head (5.1.6), the highest speed in variable speed pumps (5.1.7) and the tolerance head (tests) (see 7.3.3.4).

NOTE 3For the purposes of this provision, ASME B16.5 Class 300 flange is equivalent to the ISO 7005-1 PN50 standard.

This clause establishes the minimum compliance requirements with the designs. existing at the time of its publication. For future designs, it is consider a desirable design feature that the PSMA case matches with the pressure capabilities of the adjacent flanges.

- 5.3.6 Unless otherwise specified, vertically suspended, double integral shell of the driven gear (type OH6) and multi-stage pumps multiple horizontal pumps (with three or more stages) can be designed for double pressure ratings. If specified, the regions of aspiration should be designed for the same PSMA as the section of download.
The user must examine the relief valve installation on the side of suction of this type of installations.

5.3.7 The box pressure must be designed with an over thickness of corrosion to meet the requirements of 5.1.1.
Unless otherwise specified, the minimum corrosion income will be of 3mm (0.12 inches). The supplier is encouraged to propose corrosion diets alternatives for your consideration if the building materials with a superior corrosion resistance are employed and if they lead to a lower cost without affecting safety and reliability.

The internal cover of double casing pumps must be designed to support the maximum differential manometer pressure of 350 kPa (3.5 bar) (50psi), whichever is greater.

5.3.9 Unless otherwise specified, pumps are required with radial starter housings for any of the following systems operational: conditions.

a) A pumping temperature of 200°C (400°F) or more (a lower limit of temperature should be considered if thermal shock is likely.

b) A flammable or hazardous liquid pumped with a relative density of less than 0.7 at the specified pumping temperature.

c) A pumped liquid that is flammable or hazardous, at a discharge pressure nominal greater than 10,000 kPa (100 bar) (1,450 psi).

Axially divided casings have been successfully used beyond the limits. indicated above, in general, for applications outside the framework at a higher lower relative pressure or density (specific gravity). The success of these applications depend on the margin between the design pressure and the pressure nominal, the manufacturer's experience, with similar applications, the design and the manufacturing of the joint of the division, and the user's capability to correctly redo the articulation of the division in the field. The buyer You must take these factors into account before specifying a case. axially divided by circumstances beyond the previously defined limits.

5.3.10 Radial starter hoses will have metal-to-metal attacks, with compressed controlled joints, such as an O-ring or a spiral rolled type.

5.3.11 Central supported bodies will be used for all pumps. horizontal, except as permitted in 8.2.1.2.

5.3.12 Sealing surfaces of the O-ring, including all grooves and inner diameters will have a maximum value of average roughness (Ra) of 1.6mm (63 micro inches) for static O-rings and 0.8mm (32 micro inches) of the surface against which dynamic O-rings slide.
The interior diameter will have a minimum radius of 3mm (0.12 inches) or a minimum 1.5mm (0.06in) beveled input conduit for static O-ring seals and a minimum of 2mm (0.08in) beveled input conduit for joints Dynamic theories. Chamfers must have a maximum angle of 30°.

5.3.13 Fixing screws to facilitate the disassembly of the casing. One of the contact faces will be relieved (boring counter or embedded) to avoid a leakage union or incorrect adjustment caused by damaging the face. It will minimize.

5.3.14 The use of threaded holes in pressure-bearing parts. To avoid pressure leaks in the roof sections, metal, equal thickness at least half of the nominal bolt or screw diameter, in addition to the ones related to corrosion will be left around and below the bottom part of drilled and tapped holes.

the internal threaded part must be made of a material completely resistant to attack corrosive due to the pumped liquid.

b) The plugs are supplied in all major gut joints except Screws are specifically approved by the buyer.

5.4 INJECTORS AND CONNECTIONS BOX PRESSURE
5.4.1 OPENING SIZES OF THE HOUSING

5.4.1.1 The holes of the nozzles and other pressure connections of the box there will be standard pipe sizes. The openings of DN 32, 65, 90, 125, 175 and 225 (1 ¼, 2 ½, 3 ½, 5, 7 and 9 NPS) will not be used.

5.4.1.2 Casing pipe connections should not be suction points and The discharge must be at least DN 15 (1/2 NPS) for pumps with drain openings of the nozzle DN 50 (2 NPS) and smaller. The connections must be at least DN 20 (3/4 NPS) for pumps with openings of the discharge nozzles DN 80 (NPS 3) and larger, except that the connections of the seal wash pipes and gauges can be DN 15 (1/2 NPS) regardless of the size of the pump.

5.4.2 SUCTION AND DISCHARGE NOZZLES

5.4.2.1 Suction and discharge hoses with flanges, except for pump hoses. with forged housings, that are welded or machined and with nails. One and two stage pumps must have suction and discharge flanges of the same type.

5.4.2.2 Cast iron flanges face flat, except as indicated in 5.4.2.4, they adjust to the dimensional requirements of the ISO 7005-2 standard and the finishing requirements for flange ASME B16.1 or ASME B16.42. PN 20 (Class Flanges will have a minimum thickness equal to that of PN 40 (Class 250) flanges. for sizes DN 200 (8 NPS) and smaller.

5.4.2.3 The brackets shall be made of iron, at least they meet the requirements dimensions of ISO 7005-1 PN50 except as stated in 5.4.2.4 and the finish requirements for flange ASME B16.5 or ASME B16.47.

NOTE the effects of this provision, ASME B16.5 Class 300 and ASME B16.47 Class 300 is equivalent to ISO 7005-1 PN50.

5.4.2.4 Straps in all materials that are thicker or have a diameter exterior greater than required by the relevant ISO (ASME) standards in this International Standard is acceptable. Non-standard (large size) flanges they will be fully sized in the layout. If flanges of large size requires bolts or screws of non-standard length, this requirement must be identified in the layout plan.

5.4.2.5 Bridas will be filled face or stain facing backwards, and will be intended for such effect in flowering, with the exception for guts with shirt

5.4.3 AUXILIARY CONNECTIONS

5.4.3.1 For non-flammable, non-hazardous liquids, auxiliary connections for the pressure casing can be threaded.

5.4.3.2 Unless otherwise specified, threads will be tapered threads. according to ISO 7. Openings and patterns for threads must comply with ASME B16.5.

NOTE: For the purposes of this provision, ASME B1.20.1 is equivalent to ISO 7.

• 5.4.3.3 If specified, cylindrical threads may be used according to ISO 228-1. If cylindrical threads are used, which will be sealed with a contained front gasket, and The connection boss will have a machined face suitable for joint. containment (see Figure 19).

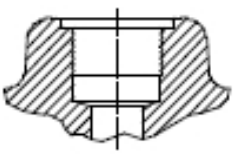

Figure 19 - Proper machine face for joint containment if it is use cylindrical threads

5.4.3.4 For flammable or hazardous liquids, auxiliary connections to the pressure casing, except for the seal sleeve, will be weld-in, welded to either fully or partially of the network. Buyer interface connections must to end in a bracket.

5.4.3.5 Welded connections to the casing must meet or exceed material requirements for the casing, including impact values, instead of the requirements of the connected piping. All connection welds will be completed before the housing is hydrostatically tested (see 7.3.2).

5.4.3.6 Screwed or welded nipples to the casing must not exceed 150mm (6 inches) long and must have a minimum of Schedule 160 without welding for sizes DN 25 (NPS 1) and smaller and a minimum of schedule 80 for DN 40 (1 -1 / 2 NPS).

5.4.3.7 The threaded openings that are not connected to the pipe are only allowed in the seal glands and material pumps class I-1 and I-2 (see Annex H). If provided, they will be connected. Tapered threaded plugs they must be long-stemmed, solid round or hexagonal head long handle, bar plugs according to ASME B16.11. If cylindrical threads are it is specified in 5.4.3.3, plugs will be solid hexagonal plugs compliance with standard DIN 910. These plugs must meet the material requirements of the casing. A lubricant/sealant that is suitable for high-temperature service will be used to ensure that the threads are the tight vapor. Plastic plugs are not allowed.

• 5.4.3.8 mechanized and riveted buyer connections require specific buyer approval. If approved, they will comply with the requirements that face and the drilling of the ISO 7005 or ISO 7005-2 -1 standard.

Asparagus and nuts will be furnished and installed. The former will be removed. 1.5 threads on both ends of each beam.

NOTE the effects of this provision, ASME B16.1 and ASME B16.5 are equivalents to ISO 7005-1 and ISO 7005-2, respectively.

5.4.3.9 All connections must be suitable for the test pressure hydrostatics of the region of the box to which they are attached.

5.4.3.10 All pumps will be equipped with ventilation connections. drainage, except that the ventilation connections can be omitted if the pump It is self-ventilating due to the arrangement of the nozzles.
Como una guía, una bomba se considera auto-ventilación si la disposición de nozzle and the housing configuration permit sufficient ventilation of the gases from the first stage impeller and the volute area to avoid the loss of priming during the start-up sequence.

5.4.3.11 All connections of the Buyer must be accessible for the disassembly without the need for the pump or any important part of the pump, when moved.

5.5 EXTERNAL FORCES AND MOMENTS NOZZLE

5.5.1 Steel and alloy for horizontal pumps and their base plates and Vertically suspended pumps will be designed for performance satisfactory if subjected to the forces and moments in Table 4. For the horizontal pumps, two effects of the nozzle loads are considered: the distortion of the pump casing (see 5.3.3 and 5.3.4) and the lack of alignment of the pump and controller axes (see 6.3.5).

5.5.2 The forces and moments for vertical inline pumps will be double. from the values of Table 4 for the nozzle side.

5.5.3 For pump housings made of materials other than steel or steel alloy or for pumps with nozzles larger than DN 400 (NPS 16), the supplier will present the allowable loads of nozzles corresponding to the format in Table 4.

Table 4 - nozzle loads

	SI units
	Nominal flange size (DN)
	<50 – 80 – 100 – 150 – 200 – 250 – 300 – 350 - 400
	Force (N) and moments (Nm)
Each upper nozzle	
FX	710 - 1070 – 1420 – 2490 – 3780 – 5340 – 6670 - 7120 -8450
FY	580 – 890 – 1160 – 2050 – 3110 – 4450 – 5340 – 5780 - 6670
FZ	890 – 1330 – 1780 – 3110 – 4890 – 6670 – 8000 – 8900 - 10230
FR	1280 - 1930 - 2560 - 4480 - 6920 - 9630 - 11700 - 12780 - 14850
Each side nozzle	
FX	710 – 1070 - 1420 - 2490 - 3780 – 5340 – 6670 – 7120 - 8450
FY	890 - 1330 - 1780 - 3110 - 4890 - 6670 - 8000 -8900 - 10230
FZ	580 – 890 – 1160 – 2050 – 3110 – 4450 – 5340 – 5780 - 6670
FR	1280 - 1930 - 2560 - 4480 - 6920 - 9630 - 11700 - 12780 - 14850
Each final nozzle	
FX	890 - 1330 – 1780 - 3110 – 4890 - 6670 - 8000 - 8900 - 10230
FY	710 - 1070 - 1420 - 2490 - 3780 - 5340 - 6670 - 7120 - 8450
FZ	580 - 890 - 11601 - 2050 - 3110 - 4450 - 5340 - 5780 - 6670
FR	1 280 - 1930 - 2560 - 4480 - 6920 - 9630 - 11700 - 12780 - 14850
Each nozzle	
MX	460 - 950 - 1330 - 2300 - 3530 - 5020 - 6100 - 6370 - 7320
MY	230 - 470 - 680 - 1180 - 1760 - 2440 - 2980 - 3120 - 3660
MZ	350 - 720 - 1000 - 1760 - 2580 - 3800 - 4610 - 4750 - 5420
MR	620 - 1280 - 1800 - 3130 - 4710 - 6750 - 8210 - 8540 - 9820

NOTE 1 See Figure 20 through Figure 24 for the orientation of the loads. nozzle (X, Y, and Z).
NOTE 2 Each value shown above indicates the range of less than that value, more than value, for example, 710 indicates a range of -710 to 710.

Table 4 - nozzle loads (continued)

	SI units
	Nominal pipe size (NPS)
	< 2 3 4 6 8 10 12 14 16
	Forces (lbf) and moments (ft.lbf)
Each upper nozzle	
FX	160 - 240 - 320 - 560 - 850 - 1200 - 1500 - 1600 - 1900
FY	130 - 200 - 260 - 460 - 700 - 1000 - 1200 - 1300 - 1500
FZ	200 - 300 - 400 - 700 - 1100 - 1500 - 1800 - 2000 - 2 300
FR	290 - 430 - 570 - 1010 - 1560 - 2200 - 2600 - 2900 - 3300
Each side nozzle	
FX	160 - 240 - 320 - 560 - 850 - 1200 - 1500 - 1600 - 1900
FY	200 - 300 - 400 - 700 - 1100 - 1500 - 1800 - 2000 - 2300
FZ	130 - 200 - 260 - 460 - 700 - 1000 - 1200 - 1300 - 1500
FR	290 - 430 - 570 - 1010 - 1560 - 2200 - 2600 - 2900 - 3300
Each end nozzle	
FX	200 - 300 - 400 - 700 - 1100 - 1500 - 1800 - 2000 - 2 300
FY	160 - 240 - 320 - 560 - 850 - 1200 - 1500 - 1600 - 1900
FZ	130 - 200 - 260 - 460 - 700 - 1000 - 1200 - 1300 - 1500
FR	290 - 430 - 570 - 1010 - 1560 - 2200 - 2600 - 2900 - 3300
Each nozzle	
MX	340 - 700 - 980 - 1700 - 2600 - 3700 - 4500 - 4700 - 5400
MY	170 - 350 - 500 - 870 - 1300 - 1800 - 2200 - 2300 - 2700
MZ	260 - 530 - 740 - 1300 - 1900 - 2800 - 3400 - 3500 - 4000
MR	460 - 950 - 1330 - 2310 - 3500 - 5000 - 6100 - 6300 - 7200
NOTE 1 See Figure 20 to Figure 24 for the orientation of the loads nozzle (X, Y and Z). NOTE 2 Each value shown below indicates the range of less than that value, more than value, for example, 160 indicates a range from -160 to 160.	

5.5.4 The coordinate system(s) is shown in Figure 20 up to Figure 24 is used to apply the forces and moments in Table 4.

• **5.5.5 Appendix F provides methods for classifying nozzle loads by** above those in Table 4. These methods can be used if they are approved by the buyer and the buyer must then direct the designer of pipes consequently. The buyer must be aware that the use Annex F methods may result in up to a 50% greater misalignment of what would happen with the loads from Table 4.

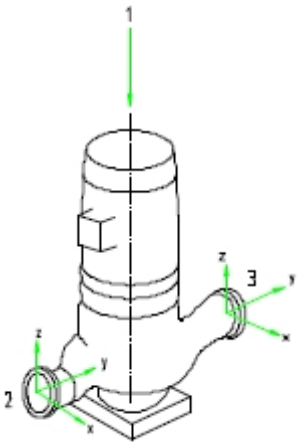

Key
central line of the axis
2. download
suction

Figure 20 - Coordinate system for forces and moments in the Table 4 - vertical inline pumps

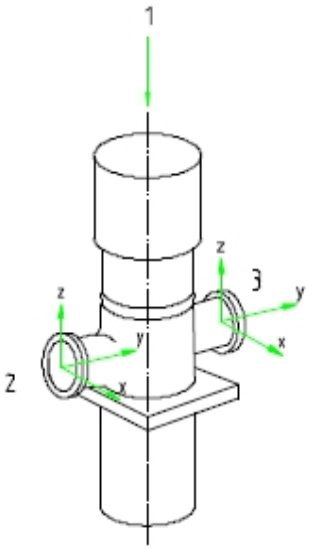

Key
central line of the axis
2. download
3. suction

Figure 21 - Coordinate system for forces and moments in the Table 4 – vertically suspended double casing pumps.

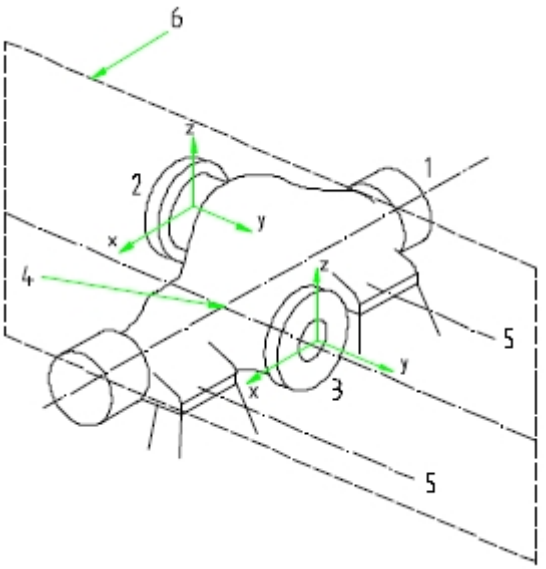

Key
central line of the axis
2. download
3. suction
4. Pump center
5. central pedestal
6. vertical plane

Figure 22 - Coordinate system for forces and moments in the
Table 4 - Horizontal pumps with side suction and side nozzles
download

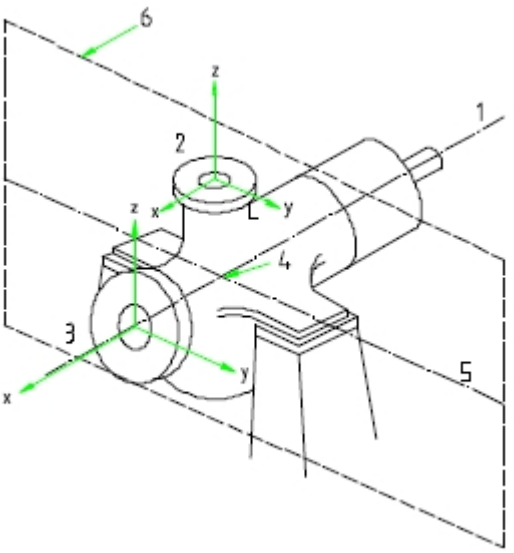

Key
central line of the axis
2. download
suction
4. Pump center
5. central pedestal
vertical plane

Figure 23 - Coordinate system for forces and moments in the

Table 4 - Horizontal pumps with axial suction and nozzles of superior downloads

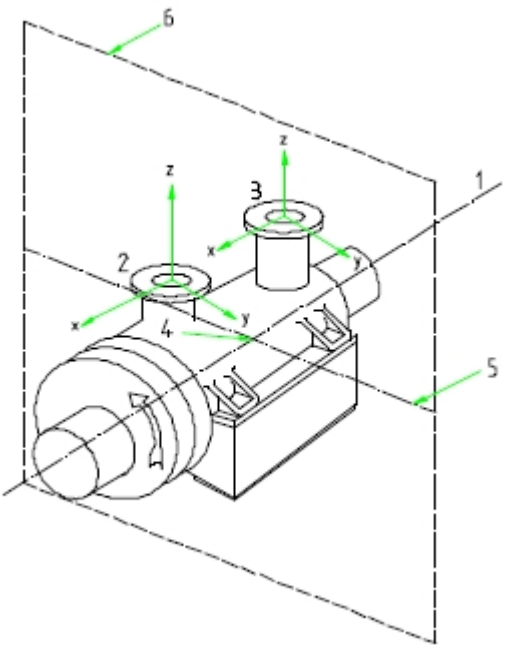

Key
central axis line
2. download
suction
4. Pump center
5. central pedestal
6. vertical plane

Figure 24 - Coordinate system for forces and moments in the

Table 4 - Horizontal pumps with upper nozzles

5.6 ROTORS

5.6.1 Unless otherwise provided by the buyer, drivers
They must be of the totally enclosed type.

Closed NOTA impellers (closed) are less sensitive to axial position and, therefore, preferable for long axis sets, where the displacement axial due to thermal expansion/contraction or thrust can be substantial. Semi-open actuators can offer greater efficiency, due to the elimination of the friction from a shroud disk. The clearances of operation for semi-open in vertical pumps can be adjusted from the coupling or the top of the engine, therefore, possibly, the restoration of efficiency and the pump exit without disassembly of parts of the pump. The open impeller is typically of a propeller type axial flow designed for large capacities in low heads; the open impeller is also used for volute sump pumps with a separate download.

5.6.2 The impellers will be made of a single piece of casting, forging or manufacturing.

Note that turbines, as forgings or fabrications, have machined ways, which they can offer better performance for speed-specific designs low suction.

5.6.3 Impellers will be the appropriate form for the shaft. Impeller fastening for the axle is unacceptable. With the buyer's approval, clamps of The suspension can be used in vertically suspended pumps. Impellers Radials must be secured to the axis with a screw head or nut that does not expose shaft threads. The clamping device must be threaded to tension. by liquid drag in the impeller during normal rotation, and a method of positive mechanical locking (for example, a fastening screw is required stressed and corrosion-resistant or a washer of the tongue type. Head screws will have threads and a reduced diameter shaft for reduce the stress concentrations.

5.6.4 Impellers will have solid centers. The impellers can be facts of a pattern with a nucleus if the nucleus is completely filled with a suitable metal that has a melting point of no less than 260 °C (500 °F) for pumps with cast iron housings and not less than 540 °C (1,000 °F) for pumps with cast steel housings.

The requirement to fill the cores of the impeller with cores is intended for minimize the danger to personnel if and when they are drivers eliminated by heating.

5.6.5 For shafts that require sleeve joints to pass over the discussions, at least 1.5mm (0.06in) radial play must be provided between the threaded rods and the internal diameter of the joint, and the The diameter transition will be beveled in accordance with 5.3.12.

5.6.6 The adjustment axis for sealing the sleeve(s) will be h6/G7 in accordance with the ISO standard 286.

5.6.7 Areas of axes that may be damaged by fastening screws must be released to facilitate the removal of sleeves or other components.

The shafts are machined and finished along their length, in such a way that the TIR is no more than 25mm (0.001in).

5.6.9 To obtain satisfactory seal performance, the stiffness of the shaft it must limit the total deflection under the most severe dynamic conditions about the allowable operating range of the pump with impeller of maximum diameter(s) and the specified speed and fluid at 50mm (0.002 in) in it faces primary seal. This shaft deflection limit can be achieved by a combination of the shaft diameter, the shaft or cantilever period, and the design from the housing (including the use of dual coils or diffusers). For one and two stage pumps, no credit will be taken for the effects of reinforcement wear ring fluid of the impeller. For multistage pumps, the liquid reinforcement effects should be considered and the calculations must be both one and two times the nominal design permissions are carried out. The rigidity from the lubricant fluid of the lubricated bearings of products and bearing bushings It will calculate both once and twice the nominal design permits.

5.6.10 If the non-contact areas of vibration probes are decorated with agreement with 6.4.2.2, detection of the axis (both radial vibration and axial position) it must be respected by the radial vibration probes shall:

a) to be concentric with the bearing stubs;

b) be free of stencil and write marks or any other discontinuity of surface, such as an oil hole or a keyway, for a distance minimum of a tip diameter of the probe on each side of the probe;

c) not being metalized, wrapped, or silvered in the rotors of materials that they present consistent electrical properties;

d) to have a final surface finish of 0.8mm (32min) Ra or smoother, preferably obtained by polishing or burnishing;

e) be correctly demagnetized at the levels specified in API 670, the treaty in another way so that the total electrical and mechanical dislocation do not exceed the following:

1) For the areas that must be monitored by vibration probes radial, 25% of the allowed peak-to-peak vibration amplitude or 6mm (0.25 million), whichever is greater.

2) The areas must be observed by axial position probes, 13mm (0.5 mil).

5.6.11 If the shaft is made of a material that exhibits electrical properties inconsistent, the axis of the detection zones may be produced by mangas adjustment by contraction or rings 'target' to the axis. Rings of destiny will be fulfilled in accordance with 5.6.10. The use of rings of Destination requires specific buyer approval.
Materials known to exhibit inconsistent electrical properties are high chromium alloys such as 17-4 PH, duplex stainless steel and ASTM A 479 degree XM -19.

5.6.12 If it is specified that the equipment will have means for assembly without contact vibration probes (6.4.2.2), the axis can be prepared accordingly with the requirements of 5.6.10 and API 670.

5.6.13 If they are furnished without contact vibration probes, registers you need electrical and mechanical decentering for the 360 ° in each The location of the probe will be included in the mechanical test report.

5.6.14 All the keys of the shaft will have spokes according to ASME B17.1.

NOTE This requirement applies to all the axis slots, not just those that are in the coupling(s).

5.6.15 The rotor of a single and two-stage pumps will be designed as their first critical bending speed in dry at least 20% above the maximum continuous operating speed of the pump.

5.7 WEAR RINGS AND OPERATIONAL AUTHORIZATIONS

5.7.1 Radial operating clearances will be used to limit leaks.
internals and, where applicable, the axial thrust balance. Pumping impeller of palettes or axial clearances will not be used to balance axial thrust. Renewable wear rings must be provided in the housing of the pump. The impellers can have integral wear surfaces or rings of renewable wear.

5.7.2 wear surface of hardenable coupling materials they must have a difference in Brinell hardness number of at least 50 to less than both the stationary and the rotating wear surfaces have Brinell hardness numbers of at least 400.

5.7.3 renewable wear rings, if any, will be maintained in their
Place for a pressure adjustment with fixing pins, screws (axial or radial) or by spot welding. The diameter of a hole in a ring of wear for a radial pin or threaded stud should not exceed a a third of the width of the wear ring.

Service authorizations must comply with the requirements of 5.7.4.a) through 5.7.4.c).

a) When operating distances between the rings are established wear and other moving parts, temperature will be taken into account pumping, suction conditions, the properties of the liquid, the expansion thermal and excoriation characteristics of the materials, and the efficiency of the bomb. Free spaces must be sufficient to ensure the reliability of the operation and freedom from seizure in all specified operating conditions.

b) For cast iron, bronze, martensitic stainless steel, hardened and materials with low similar trends excoriation, the distances minimums given in Table 5 will be used. For materials with high trends excoriation and all the materials that work at temperatures above 260 °C (500 °F), add 125mm (0.005 in) to these diametrical distances.

c) For non-metallic wear ring materials with trends very low or no excoriation (see annex H, Table A.4), clearances lower than those indicated in table 5 may be proposed by the seller. Factors such as distortion and thermal gradients are they will consider to be sure that the clearances are sufficient to ensure the reliability of the operation and freedom from seizure under all conditions of specified operation.

Table 5 - Minimum Operating Clearances

Diameter of the piece rotating in the dispatch (mm)	Minimum distance diametral (mm)	Diameter of the piece rotating in the office of (in)	Minimum distance diametral (in)
50	0.25	2,000	0.010
50 to 64.99	0.28	2,000 to 2,499	0.011
65 to 79.99	0.30	2,500 to 2,999	0.012
80 to 89.99	0.33	3,000 to 3,499	0,013
90 to 99.99	0.35	3,500 to 3,999	0.014
100 to 114.99	0.38	4,000 to 4,499	0.015
115 to 124.99	0.40	4,500 to 4,999	0.016
125 to 149.99	0,43	5,000 to 5,999	0.017
150 to 174.99	0.45	6,000 to 6,999	0.018
175 to 199.99	0.48	7,000 to 7,999	0.019
200 to 224.99	0.50	8,000 to 8,999	0.020
225 to 249.99	0.53	9,000 to 9,999	0.021
250 to 274.99	0.55	10,000 to 10,999	0.022
275 to 299.99	0.58	11,000 to 11,999	0.023
300 to 324.99	0.60	12,000 to 12,999	0.024
325 to 349.99	0.63	13,000 to 13,999	0.025
350 to 374.99	0.65	14,000 to 14,999	0.026
375 to 399.99	0.68	15,000 to 15,999	0,027
400 to 424.99	0.70	16,000 a 16,999	0.028
425 to 449.99	0.73	17,000 a 17,999	0.029
450 to 474.99	0.75	18,000 to 18,999	0.030
475 a 499,99	0.78	19,000 to 19,999	0.031
500 to 524.99	0.80	20,000 a 20,999	0.032
525 to 549.99	0.83	21,000 to 21,999	0.033
550 to 574.99	0.85	22,000 to 22,999	0.034
575 to 599.99	0.88	23,000 to 23,999	0.035
600 to 624.99	0.90	24,000 to 24,999	0.036
625 to 649.99	0.95	25,000 to 25,999	0.037
NOTE For diameters greater than 649.99 mm (25.999 inches), the minimum diametrical distances will be 0.95 mm (0.037 in) plus 1 mm for each additional 1 mm in diameter or fraction (0.001 for each additional 1 in.			

5.8 MECHANICAL CLOSURES

- **5.8.1 The pumps must be equipped with mechanical seals and systems** of sealing according to the ISO 21049 standard, including the dimensions of pump interface and the gasket (see Table 6 and Figure 25). The buyer must specify the necessary seal category. The buyer should use the data sheets for the ISO 21049 standard for this purpose.

NOTE: For the purposes of this provision, API 682 is equivalent to the standard ISO 21049.

The seal cartridge must be removable without disturbing the driver.

5.8.3 The closing chamber will be adjusted to the dimensions shown in the Figure 25 and Table 6. For flanged pumps and pressure above the minimum values in 5.3.5, the size of the gland and the study circle large nails can be supplied if necessary for
meet the tension requirements of 5.3.4 or compress joints sufficiently in spiral, according to the manufacturer's specifications.

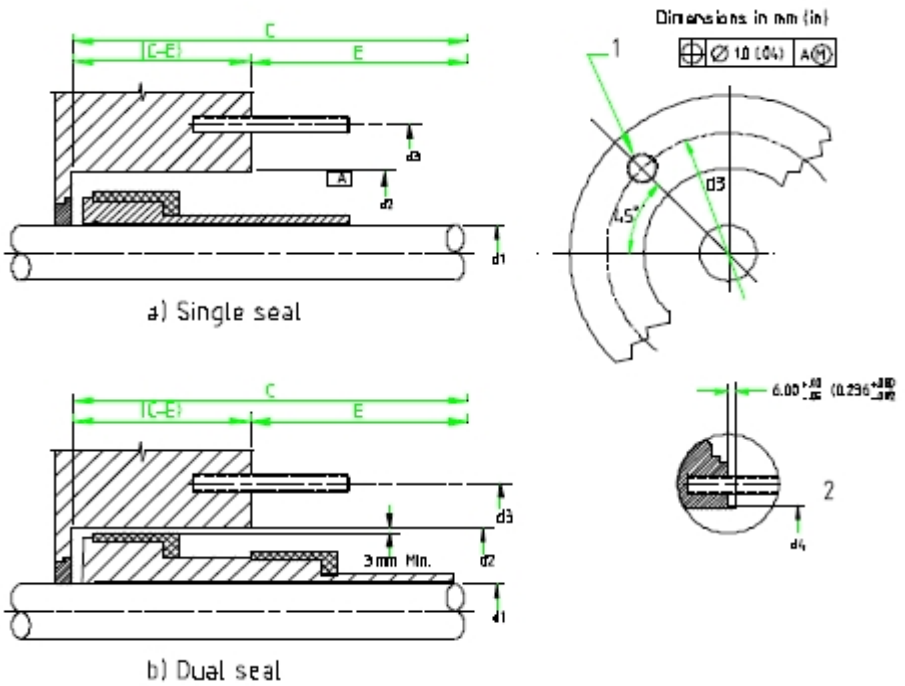

key
Asparagus Gland (four)
2. Slot gland optional
C. The total length of the nearest obstruction
E. Duration of the camera seal face to the nearest obstruction

Figure 25 - Camera Diagrams

Table 6 - Standard dimensions for joint chambers, sealing attachments gland and the cartridge sleeves of the mechanical seal (see Figure 25)

Size del seal of the camera	Diameter of axis (max.)[a] (d1)	Chamber of seal of orifice (d2)	Circle of studies gland (d3)	Slot gland exterior (d4)	Length total (min.)[C] (C)	Of course length (min.)[C] (E)	size of the bolt YES	(US)
1	20,00 (0,787)	70.00 (2.756)	105 (4,13)	85.00 (3.346)	150 (5.90)	100 (3.94)	M12x1.75	1/2"-13
2	30,00 (1,181)	80,00 (3,150)	115 (4.53)	95.00 (3.740)	155 (6,10)	100 (3.94)	M12x1.75	1/2"-13
3	40.00 (1.575)	90.00 (3.543)	125 (4.92)	105,00 (4,134)	160 (6.30)	100 (3.94)	M12x1.75	1/2"-13
4	50.00 (1.968)	100.00 (3.937)	140 (5.51)	115.00 (4.528)	165 (6.50)	110 (4.33)	M16x2.0	5/8"-11
5	60,00 (2,362)	120.00 (4.724)	160 (6,30)	135,00 (5,315)	170 (6.69)	110 (4.33)	M16x2.0	5/8"-11
6	70,00 (2,756)	130.00 (5,118)	170 (6.69)	145.00 (5.709)	175 (6,89)	110 (4.33)	M16x2.0	5/8”-11
7	80.00 (3,150)	140.00 (5.512)	180 (7.09)	155,00 (6,102)	180 (7.09)	110 (4.33)	M16x2.0	5/8”-11
8	90.00 (3.543)	160,00 (6,299)	205 (8.07)	175.00 (6,890)	185 (7.28)	120 (4.72)	M20x2.5	¾”-10
9	100.00 (3.937)	170,00 (6,693)	215 (8.46)	185,00 (7,283)	190 (7.48)	120 (4.72)	M20x2.5	¾"-10
10	110.00 (4,331)	180,00 (7,087)	225 (8.86)	195,00 (7,677)	195 (7.68)	120 (4.72)	M20x2.5	3/4"-10

a- Dimensions according to Tolerance Class h6.
b- Dimensions according to Tolerance Class h7, for axial-split pumps, an additional tolerance of ± 75 mm (0.003 in) to allow for the thickness of the joint.
c- Axis deflection criteria (5.6.9) may require (C) and (E) regarding the size of dimensions 1 and 2 sealing cameras that will be reduced below the minimum values listed, depending on the construction of the specific pump and the housing design.

Measures will be taken to center the seal and/or chamber casing. either with an interior or exterior diameter registered in shape. The surface in The form of registration will be concentric with the axis and will indicate a total of displacement of no more than 125 mm (in 0005). Use of the pins of the The seal ring of the center mechanical seal is not acceptable. (see Annex K).

5.8.5 The face seal off-center (TIR) shall not exceed 0.5 mm 1.0 mm (0.0005 in/in) from the seal hole camera (see Annex K).

5.8.6 Specified protection and pump connections must be identified. through permanently marked symbols on the component (such as the printing, casting or chemically etched). The symbols must be in agreement with those specified in ISO 21049.

5.8.7 Seal glands and sealing chambers must be prepared for only the connections required by the flush plan board. If not specified the points of additional threaded connections that are not used must be connected according to 5.4.3.7.

Measures will be taken to ensure the complete ventilation of the chamber. of the stamp.

- **If specified, the jackets will be provided in sealing chambers for** the heating. The heating needs will be agreed upon at the expense of buyer, the seller and manufacturer of the seal for high point products de fusión.

5.8.10 Mechanical seals and glands for all pumps, except vertically suspended pumps sent without mounted driver, they they will install it in the pump before shipping, and it will be clean and ready for service initial. If the seals require the final adjustment or installation in the field, the The seller must attach a warning metal label of this requirement.

5.8.11 The coupling joint between the seal bushing and the face The seal chamber must incorporate a confined gasket to prevent bursts. The joint must be of the controlled compression type, for example, a toroidal gasket or a spiral-wound gasket, with a set of metal to metal contact. Where space or design limitations make for this practical requirement, an alternative design for the seal socket must be presented to the buyer for their approval.

5.9 DYNAMICS

5.9.1 general

The topics of critical speed and lateral analysis are covered in each section specific pump type (see 5.6.15).

5.9.2 TORSIONAL ANALYSIS

5.9.2.1 Unless otherwise specified, a torsion analysis shall to be carried out by the manufacturer who has the unit responsibility if the conductor is one of the following:

a) electric motor or turbine, through the gear rated at 1,500 kW (000 hp 2) or more;

b) the internal combustion engine has 250 kW (335 HP) or more;

c) synchronous motor has 500 kW (670 HP) or more;

d) electric motor with variable frequency drive (VFD) has 1,000 kW (350 hp 1) or more.

The analysis will be the train in its entirety unless the train includes a device. that has weak dynamic coupling, for example, a coupling hydraulic or torque converter.

For the corresponding element in 5.9.2.1, the excitation will be evaluated. the following frequencies:

a) Train with the team(s): 1 and 2 'r/min of any shaft

b) Engine unit: n 'r/min

c)Motor síncrono: 'frecuencia de deslizamiento, 1 y 2 de' n frecuencia de línea

d) Variable frequency unit: n 'r/min, 1 and 2 of' line frequency where
r/min is the rotor speed, expressed in revolutions per minute;
n is an integer determined by the manufacturer of the unit;

For the engines derived from: the number of work races per revolution

-For motors: derived from the number of poles.

The excitation frequencies of the motor units, items c) and d), they include the conditions of transient and continuous state.

5.9.2.3 The natural torsional frequencies of the complete train must be at less than 10% above or 10% below any excitation frequency it is possible within the specified operating speed range (from minimum to maximum continuous speed).

5.9.2.4 Torsional resonances are calculated to fall within the margin specified in 5.9.2.3 (and the buyer and seller have agreed that all the efforts to eliminate the noise from within the frequency range limited has been exhausted), an effort analysis will be carried out for demonstrate that the resonances have no adverse effect on the train complete. The hypotheses formulated in this analysis about the magnitude of the excitation and the degree of damping will make it clear. The criteria of acceptance for this analysis must be approved by the buyer and the seller.

5.9.2.5 If a torsional analysis is performed, a Campbell diagram will be provided. to the buyer for information only.

- **5.9.2.6 If specified, the manufacturer will provide a detailed report of the** torsional analysis. The report must include the following:

a) a description of the method used to calculate the natural frequencies;

b) a diagram of the mass elastic system;

c) a diagram of the moment of mass and the torsional stiffness of each element of elastic mass system;

a Campbell diagram;

A shape diagram of the mode with the voltage peak is shown for each resonance frequency, if a tension analysis is carried out.

5.9.3 VIBRATION

5.9.3.1 vibrations of the centrifugal pump vary with the flow, being due to general a minimum in the vicinity of the point of best flow of efficiency and increasing as the flow is increased or decreased. The change in the vibration as the flow varied from better flow of efficiency point depends of the energy density of the pump, its specific speed, and its specific suction speed. In general, the change in vibration increases with the increase in energy density, a higher specific speed, and a higher specific suction speed.

With these general characteristics, operational flow range of a pump centrifuge can be divided into two regions, one referred to as the best efficiency or the preferred operating region, in which the pump shows a low vibration, the other called the allowed operating region, with its limits defined as those abilities in which the vibration of the pump it reaches a higher level, but it remains 'acceptable'. Figure 26 illustrates the concept. Factors distinct from vibration, for example, increase in the temperature with the decrease in flow or NPSHR with the increase in flow, it can dictate a narrower permissible operating range. Consult 5.1.14.
The preferred operating region and the nominal flow location will be specified in 5.1.14. The permissible operating region is indicated in the proposal. If the permissible operating region is limited by a factor that No sea vibration, that factor will also be noted in the proposal.

5.9.3.2 During the performance test, the overall vibration measurements in a range of 5 Hz to 1000 Hz and a fast Fourier transform of spectrum (FFT) will be made at each test point, except for closure. The measurements the vibration should be in the following manner:

a) In the bearing housing(s) or the equivalent location(s) of all the bombs, in the positions shown in Figure 27 and Figure 28.

b) On the axis of the pumps with hydrodynamic bearings with probes proximity if the bomb has provisions for proximity sensors.

- **5.9.3.3 The FFT spectrum must include the frequency range from 5 Hz to** times 2Z runner speed (where Z is the number of blades of the impeller, and in multi-stage pumps with different impellers, Z is the number higher impeller blades at any stage). If the spectrum is specified The tracing is included in the pump test results.

NOT The discrete frequencies 1.0, 2.0, and the times of Z speed of functioning is associated with different phenomena of the pump, and for They are of particular interest in the spectra.

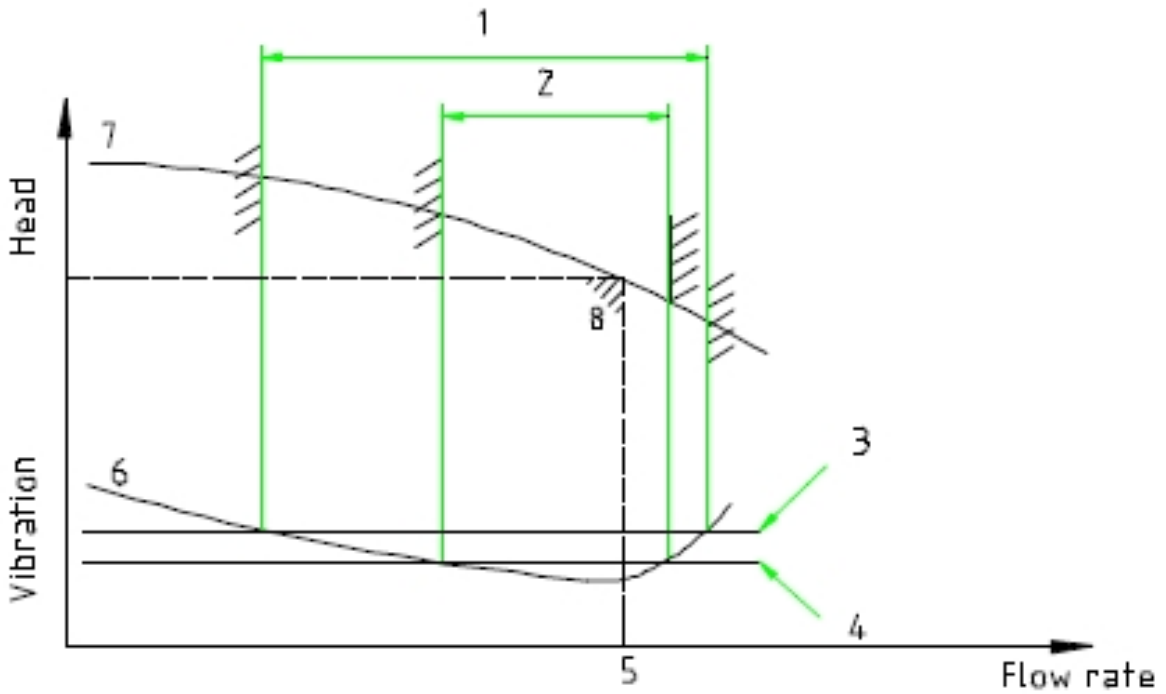

Key
1. Acceptable operating region of flow
2. Preferred flow operating region
3. Maximum allowable vibration limit at flow boundaries
4. Basic vibration limit
5. The best flow rate efficiency
6. Vibration typical function of the flow curve
7. Head-tail curve
8. Best head point of efficiency and flow rate

Figure 26 - Relationship between flow and vibrations

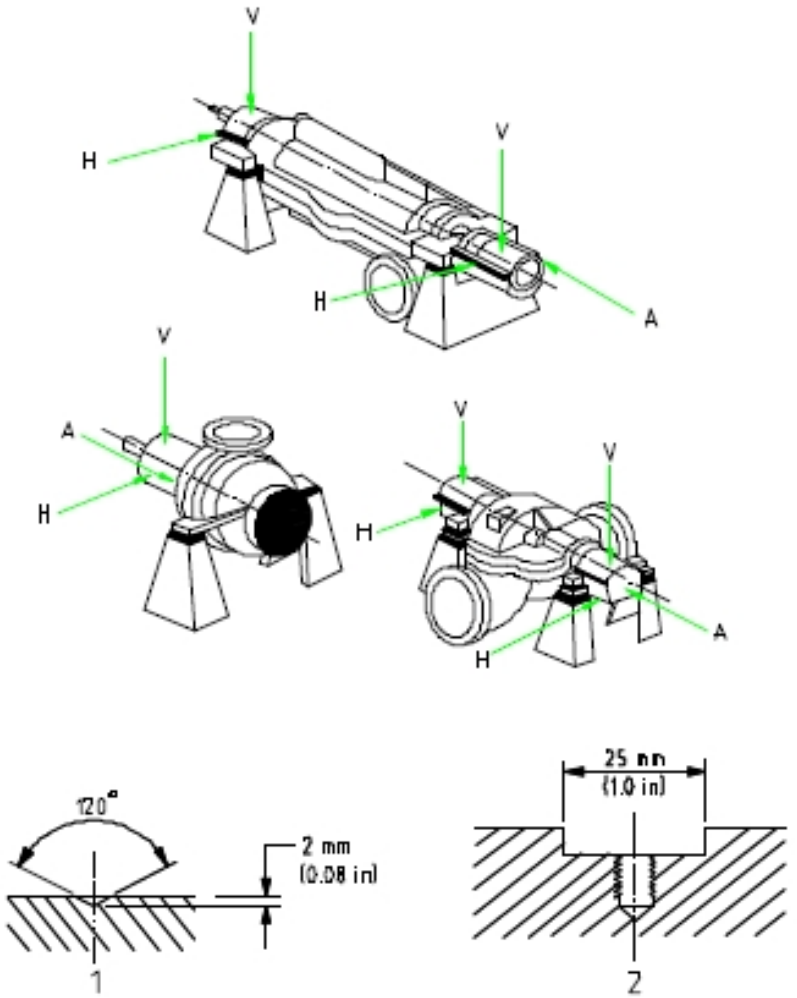

Key
Dimple (ver 5.10.2.10)
2. Optional provision for the installation of vibration measurement equipment (ver 5.10.2.11)
An axial
H Horizontal
V Vertical

Figure 27 - Locations for taking vibration readings of the pumps horizontal

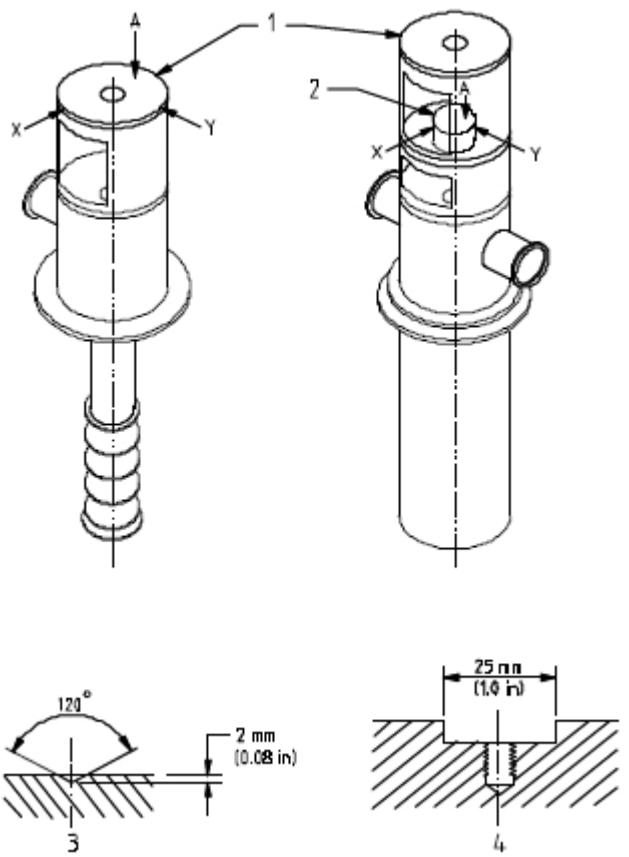

Key
Controller mounting surface
2. Pump Bearing Housing
3. Dimple (ver 5.10.2.10)
4. Optional arrangement for the installation of vibration measurement equipment (ver 5.10.2.11)

Figure 28 - Places to take vibration readings from the pumps vertically suspended

5.9.3.4 Measurements of global vibrations of the bearing housing will be made of square root (RMS) of velocity, in millimeters per second (inches per ... second) means.

5.9.3.5 Measurement of the shaft vibration will be peak-to-peak displacement in mm thousandths of an inch.

5.9.3.6 The vibration measured during the test shall not exceed the values shown in the following:
7 cantilever table and pumps between carriers.
Table 8 for vertically suspended pumps.
Bombs equipped with proximity fuses must comply with both bearing housing and shaft vibration limits.
Housing vibration limits for rolling bearings are defined only for RMS measurements.

Table 7 - Vibration limits for cantilever and between bearing pumps

Criteria	Vibration measurement location	
	Bearing box (see the Figure 27)	Axis of the pump (adjacent to the bearing)
	Type of pump bearing	
	everything	Hydrodynamic bearings
	Vibration at any flow within preferred operation of the bomb region.	
Overall	For pumps operating at Au < speeds of up to 3600 r/min and the absorption of until 300 kW (400 HP) per stage. vu <3.0 mm/s RMS (0.12 in / s RMS) b For bombs in operation above 3,600 r/min or more absorber of 300 kW (400 HP) per stage See Figure 29.	(5.2 x 10 6 / n) of 0.5 mm from peak to peak (8 000 / n) 0.5 thousand of peak to peak It must not exceed: At <50 mm from peak to peak[a] (2.0 milliseconds peak to peak)
discrete frequencies	vf<<0.67 vu	Paraffin: Af0.33Au
Permissible increase of the vibration in the flows of outside of the region of preferred operation, but within the region of admissible operation	30%	30%

Calculated for the BEP of the impeller classified with the relative density of the liquid (gravity specific) = 1.0
The values calculated from the basic limits will be rounded to two digits. significant.
where:
Vu is the speed unfiltered, as measured;
Vf is the filtered speed;
A is the amplitude of the unfiltered displacement, as measured;
Af is the filtered displacement amplitude;
f is the frequency
n is the rotation speed, expressed in revolutions per minute.

Table 8 - Vibration limits of vertically suspended pumps

Criteria	Vibration measurement location	
	Pump push you carry the accommodation or the setup of the	Axis of the pump (adjacent to bearing

	motor flanges (see Figure 28)	
	Type of pump bearing	
	everything	Bearing guide adjacent hydrodynamic accessible region of the axis
	Vibration in any flow within the region of preferred operation of the pump	
Overall	5.0 mm/s RMS (0.20 in/s RMS)	At <(6.2 x 10^6 / n) of 0.5 mm from peak to peak (10,000 / n) 0.5 thousandths of peak to peak Must not exceed: At <100 mm from peak to peak (4.0 thousandths peak to peak)
discrete frequencies	vf<<0.67vu	If Af < 0.75Au
Permissible increase of the vibration in the outside flows from the operational region preferred, but within the region of functioning admissible	30%	30%

The values calculated from the basic limits will be rounded to two significant figures.
where:
it is the speed unfiltered, as it is measured;
vf is the filtered speed;
A is the amplitude of the unfiltered displacement, as measured;
Af is the filtered displacement amplitude;
n is the rotation speed, expressed in revolutions per minute.

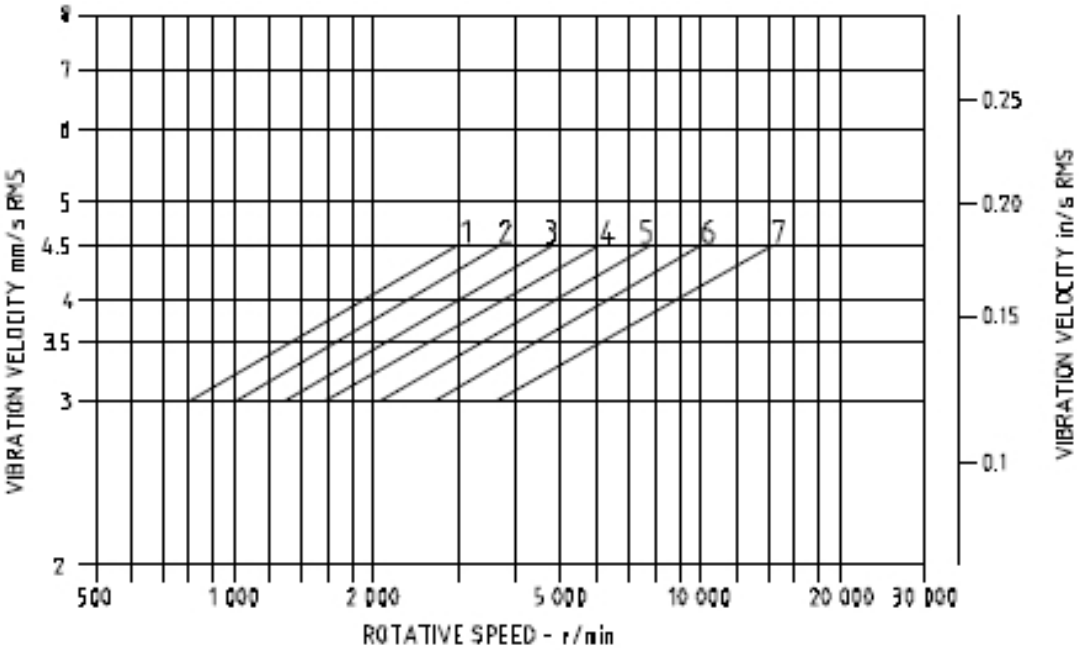

Key
P = 3,000 kilowatts per stage
2. P = 2,000 kilowatts per stage
3. P = 1,500 kilowatts per stage
4. P = 1,000 kilowatts per stage
5. P = 700 kilowatts per stage
6. P = 500 kilowatts per stage
7. P = 300 kilowatts per stage
The transition equation from 3.0 to 4.5 mm/s is vu = 3.0 (N 3 600) 0.30 ((kw stadium) 300) 0.21

Figure 29 - Vibration limits of horizontal pumps that are they exceed 3,600 rpm or absorb more than 300 kW (400 HP) by stage

5.9.3.7 At any speed greater than the maximum continuous speed, up to and including the driver's travel speed, the vibration will not exceed 150% of the maximum value recorded at the maximum continuous speed.

5.9.3.8 The variable speed pumps will operate throughout the range of specified speed without exceeding the vibration limits of this Standard International.

5.9.4 BALANCE

5.9.4.1 The drivers, balance drums, and rotating components similar principles must be dynamically balanced according to ISO 1940 - 1st grade G2.5. The weight of the gazebo used for balance should not exceed the weight of the component of being balanced.

5.9.4.2 component equilibrium can only be planar if the D/B ratio (see the Figure 30) is 6.0 or greater.

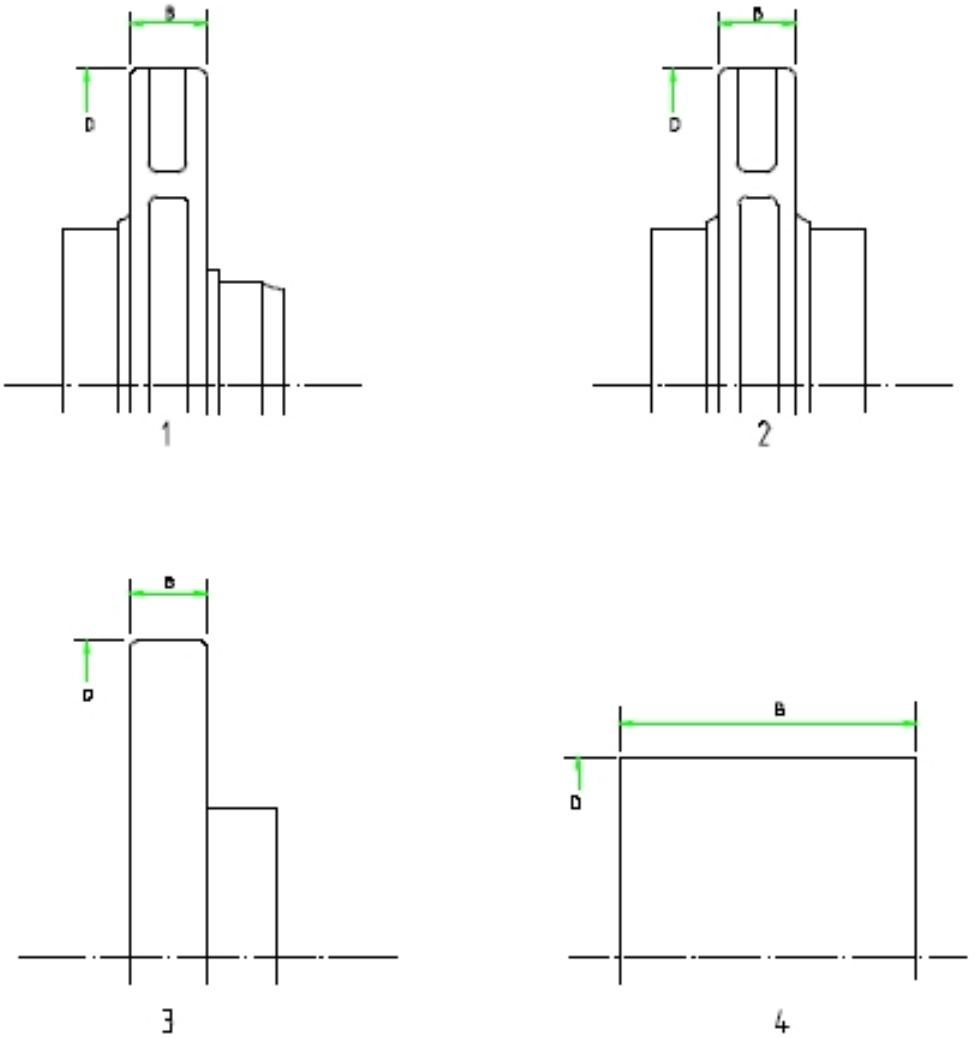

key
Simple aspirator impulse
2. Double suction impeller
3. push the collar
4. drum balance

Figure 30 - Dimensions of the rotating components to determine if single flat balancing is permissible

The rotor balancing is carried out as required in the clauses specific to the pump.

- 5.9.4.4 If specified, impellers, balance drums, and the components similar rotating components will be dynamically balanced according to ISO 1940-1 grade G1 (equivalent to "4W / n" in common U.S. terminology).

In system units, the imbalance is expressed as follows way: U = KW/n

where: U = imbalance due to the plane, expressed in ounce-inches
K = constant
W = mass of component (by components), expressed in pounds; or Load per magazine of balancing machine (for rotors), expressed in pounds
n = rotational speed, expressed in revolutions per minute

Regarding the ISO, the imbalance is expressed as a degree of quality of the ISO 1940-1 balance. Each quality of ISO balance grades covers a imbalance range. The equivalent nominal limits in the United States unitary customs indicated in this International Standard are corresponds approximately to the midpoint of the ISO range.
With modern balancing machines, it is feasible to balance the components mounted in their gazebos at U = 4W / n (nominally equivalent to ISO grade G1), or even lower depending on the weight of set, and to check the imbalance of the assembly with a check residual imbalance. However, the mass eccentricity, e, associated with imbalance of less than U = 8W / n (nominally equivalent to ISO grade G2.5) it is so small (for example, U = 4W / n gives e = 0000 070 in a scheduled assembly to be executed at 3600 r/min) that cannot be maintained if the assembly is disassembled and rebuilt. Scale degrees below G2.5 (8W / n) are, therefore, non-repeatable for the components.

5.10 BEARINGS AND BUSHINGS
5.10.1 BEARINGS

- 5.10.1.1 Each shaft must be supported by two radial bearings and one (push) of double-acting axial bearing that may or may not be combined with one of the radial bearings. The bearings must be one of the following assemblies: radial and thrust rolling elements, thrust radial element and hydrodynamic bearings or radial hydrodynamics and of push. Unless otherwise specified, the type of support and Disposition will be selected according to the limitations in Table 9.

5.10.1.2 The thrust bearings must be sized for a continuous operation under all specified conditions, including maximum differential pressure. All loads will be determined in the game internal design and also in the design of twice internal game. Additionally of rotor thrust and the reactions of internal gears due to the more extreme admissible conditions, the axial force transmitted through flexible couplings will be considered part of the obligation of any thrust bearing. Thrust bearings are offered load capacities complete if the normal rotation direction of the pump is reversed.

Thrust forces for flexible couplings metallic element are they will be calculated based on the maximum allowed deflection permitted by the coupling manufacturer.
If a sleeve bearing motor (without a thrust bearing) is directly connected to the pump shaft with a coupling, the the transmitted thrust coupling is assumed to be the maximum thrust of the motor.

5.10.1.3 the bearings must be located, preserved, and mounted on agreement with the following.

a) The bearings must be retained on the shaft with an interference fit and fit into the housing with a diametrical clearance, both in accordance with ABMA 7.

b) The bearings are mounted directly on the shaft. Supports of Bearings are acceptable only with the buyer's approval.

c) The bearings must be located on the shaft with the shoulders, necks, or other positive localization devices. The elastic rings and the spring washers are not acceptable.

d) The device used to secure the axial bearings of the shafts is it will limit a nut with a tongue type washer.

NOTE: This numeral applies to all bearings, both ball and types of rollers. For certain roller bearings, such as types of rollers cylindrical with separable strokes, having diametral clearance housing can not appropriate.

5.10.1.4 A single row of deep groove ball bearings will have radial play according to ISO 5753 Group 3 [greater than "N" (Normal) internal play]. The bearings of a single or double row have not been filled with grooves (Conrad type). Larger internal clearances can reduce the temperature rise of lubricant. However, the vibration speeds can be increased with greater distances. The seller must ensure that the values of temperature increase (5.10.2.4) and vibrations (5.9.3.6) complies with the requirements of this International Standard.

NOTE the effects of this provision, ABMA 20 Group 3 is equivalent to ISO 5753 Group 3.

5.10.1.5 The axial ball bearings will be a single row of pairs, 40° (0,7 radianes) Tipo de contacto angular (7 000 series) con jaulas mecanizadas made of brass. Non-metallic cages will not be used. Steel sheet cages will they can be used if approved by the buyer. Unless otherwise specified On the contrary, the bearings are mounted in a paired arrangement. back to back. The need for bearing separation or preload it will be determined by the seller to adapt to the request and comply with the life requirements of the bearings in Table 9.

NOTE: There are applications in the provisions of alternative bearings. they could be preferable particularly where the bearings operate in continues with minimal axial loads.

5.10.1.6 If loads exceed the capacity of the contact bearings angular paired as described in 5.10.1.5, alternative arrangements of rolling elements can be proposed.

5.10.2 BEARING BOXES

5.10.2.1 Bearing boxes will be arranged so that the bearings they can be replaced without pumping units or disturbing mounts.

- 5.10.2.2 Bearing boxes for oil-lubricated bearings not Pressure-fed must be equipped with a thread and connected for filling and drainage of the openings of at least DN 15 (1/2 NPS). The houses will be equipped with feed constant view oilers of at least 12dl (4 fl oz) in volume, with a positioned positive level (not an external screw), glass heat-resistant containers and protective wire cages. They they will put in place measures, such as a target or an overfilling plug, to detect Overfilling of the houses. A permanent indication of the oil level is accurately and clearly marked on the outside of the casing of the bearing with permanent metal tags, the markings inscribed on the parts of casting, or other durable means. The buyer must specify if requires a particular model of grease gun.

5.10.2.3 Boxes of pressure lubricated hydrodynamic bearings they will be provided to minimize foam formation. The drainage system must be suitable for keeping the oil level and foam below end seals of the axis.

sufficient cooling, including a provision for fouling, It will be made easier to maintain the oil and bearing temperatures as indicated. based on the operating conditions and with a temperature environment of 43 °C (110 °F):

a) For the pressure systems, oil outlet temperature below from 70 °C (160 °F) and temperatures of the bearing metal (if sensors of bearing temperature is supplied) less than 93 °C (200 °F). During the store tests, and under the most adverse conditions of specified operations, the increase in the temperature of the oil of The bearing must not exceed 28 K (50 ° R).

b) In the case of greased ring or splash systems, the temperature from the oil pan below 82 °C (180 °F). During the tests of the store, the increase in the temperature of the oil in the sump must not exceed 40 K (70 ° R) and (if bearing temperature sensors are provided) The outer ring temperatures will not exceed 93 °C (200 °F).

NOTE - The pumps equipped with ring oiled immersion lubrication or they may not reach temperature stabilization during the tests of short-term performance. Temperature stabilization tests are addresses in 7.3.4.7.1.

Table 9 - Bearing Selection

Condition	Type of bearing and arrangement
Speed of the radial and thrust bearing and the life within the limits of the bearings y Energy density of the pump below of the limit	Radial and thrust rolling element
Speed of the radial bearing or the life out of the limits of the bearings y Speed of the thrust bearing and the life within the limits y Energy density of the pump below the limits	Radial thrust element and bearings hydrodynamic o Radial and thrust hydrodynamics
Speed of the radial bearing and of push or out of life from the limits of the bearings o Energy density of the pump by above the limit	Radial and thrust hydrodynamics
The limits are as follows: a) Rolling speed of roller element: The factor, Ndm will not exceed 500,000 in dm is the mean diameter of the bearing [(d + D) / 2)], expressed in millimeters N is the rotational speed, expressed in revolutions per minute. b) the rolling elements life of the bearings: nominal life, L10, in accordance with the ISO 281 standard, which equates to at least 25,000 hours with continuous operation in nominal conditions, and at least 16 hours at 000 maximum radial and axial loads and the nominal speed. ISO 281 defines the nominal life, L10, in units of millions of revolutions. The practice of the sector is to convert this into hours and to refer to it as L10h. c) Energy density: if the product of the rated power of the pump, kW (hp), and by speed, r/min, is 4.0 million (5.4 million) or more, radial bearings will be used hydrodynamic axials. NOTE: For the purposes of this provision, ABMA 9 is equivalent to ISO 281.	

5.10.2.5 When water cooling is required, the preferred ones are cooling serpentine. The coils (including accessories) must be of non-ferrous material or austenitic stainless steel and they will not have joints of internal pressure. Pipes or tubes must have a minimum thickness of 1.0mm (0.040in) and will be at least 12mm (0.50 inches) in outer diameter. Water shirts, if they exist, should only have external connections. between the upper and lower accommodation jackets and will not have the joints of connections with joints neither threaded that allow water to seep into the tank oil. Water shirts should be designed to cool the oil in place of the outer ring.

The cooling of the outer ring can reduce internal play. bearing and the lack of support cause.

5.10.2.6 For pumps handling flammable or hazardous liquids, boxes of bearings, to support loads of bearing housings, and the supports between the body of the pump or the head and the housings of the Bearings must be made of steel. Compatible controller for vertical pumps that use thrust bearings in the conductor to support the shaft will be steel.

5.10.2.7 Bearing boxes for rolling element bearings must designed to prevent contamination from moisture, dust, and others strange subjects. This will be achieved without the need for an external service, due to example, the air purges. Bearing boxes must be equipped with replaceable labyrinth type or magnetic end seals and deflectors where the axis passes through the casing. Gaskets will not be used. sleeves. The seals and deflectors must be made of materials that do not produce sparks. The design of the seals and deflectors must retain effectively oil in the housing and prevent the entry of foreign material inside the casing.

5.10.2.8 Bearings and bushings must meet the requirements of 5.10.2.8.a) through 5.10.2.8.e) in case of oil mist lubrication is specified (see 5.11 3).

a) A 6mm (1/4 NPS) oil steam inlet connection it will facilitate in the upper half of the bearing housing. Connections of the pure oil fog accessories will be located so that the Oil mist will flow through the bearings. If housing design What it takes is such that short circuits cannot be avoided, directional. oil mist reclassifiers can be furnished to ensure the positive oil mist circulation through the bearings.

b) A 6mm (1/4 inch NPS) ventilation connection provide on the case cover or at the end of each of the spaces between the rolling element bearings and the housing shaft seals. Alternatively, when the oil mist connections are between each housing shaft closure and bearings, a central ventilation hole For the accommodation will be provided. Boxes with sleeve-type bearings. they will have the ventilation grille located near the end of the casing.

c) sealed or shielded bearings will not be used.

d) If pure oil mist lubrication is specified, it does not they will provide oil rings or deflectors and oil levelers constant, and arch that indicates that the oil level is not required. If it specifies oil mist lubrication purge, these elements will be provided and the greaser is channeled in such a way that it is maintained at the internal pressure of the bearing housing ING.

NOTE: process operating temperatures above 300°C (570°F), bearing boxes with pure oil mist lubrication may require special features to reduce the heating of the rings heat transfer rolling. The typical characteristics are:

1) deflectors type of heat sink;

2) stainless steel axes that have a low thermal conductivity;

3) thermal barriers;

4) cooling fan;

5) oil mist lubrication for purging (instead of oil steam) pure) with oil cooling (sump).

e) The supply of steam, oil, and drainage equipment will be the responsibility of the buyer.

5.10.2.9 Boxes for oil rings, the lubricated bearings must be provided with covered ports positioned to allow visual inspection of the oil rings with the pump in operation.

5.10.2.10 All bearing housings have dimples in the locations shown in Figure 27 and Figure 28 to facilitate the measurement of constant vibrations. The depressions must be suitable for the exact location of a hand vibration transducer with an extension "wand". Dimples can be emitted or machined and will nominally be of 2mm (0.080 inches) deep with an included angle of 120º.

- 5.10.2.11 If specified, bearing boxes will have a threaded connection. (s) for the permanent installation of vibration transducers according to API 670. If metric fasteners are supplied, the topics will be the M8. See the Figure 27 and Figure 28.

- **5.10.2.12 If specified, a flat surface of at least 25mm** (1 inch) in diameter, is supplied for the location of the vibration magnetic based on measurement equipment.

5.11 LUBRICATION

5.11.1 Unless otherwise specified, the bearings and bushings they will be conditioned for oil lubrication with a mineral oil (hydrocarbons).

5.11.2 The operation and maintenance manual must describe how the oil circulation lubrication system.
5.11.3 If specified, precautions must be taken, whether pure or purged. of lubricating oil by oil mist (see 5.10.2.8 for the requirements).

5.11.4 If specified, the element bearings will be lubricated with grease. in accordance with 5.11.4.a) through 5.11.4.d):

a) The duration of the grease (re-greasing interval) is calculated using the method recommended by the bearing manufacturer or a method alternative approved by the buyer.

b) Grease lubrication cannot be used if the life estimate of the fat is less than 2,000 h.

c) If the estimated life of the grease is 2,000 hours or more, but less than 25,000 hours, the necessary measures will be taken to re-grease the bearings. the service and for the effective performance of old grease or excess and the The supplier must inform the buyer of the re-greasing interval. required.

d) If the estimated life of the fat is 25,000 hours or more, it will not be installed. greasing nozzles or any other system for the addition of grease in the service.

5.12 MATERIALES
5.12.1 GENERAL

- 5.12.1.1El comprador debe especificar la clase de material para piezas de the bomb. Annex G, Table G.1 is a guide that shows types of materials that can be suitable for different services. Alternative materials recommended for the service by the seller, including material that can improving life and performance in service can also be included in the proposal and appears in the final data sheets.

5.12.1.2 The material specification of all components listed in Table A.1 is clearly indicated in the supplier of Proposal. The materials must be identified by reference to the standards. applicable international standards, including grade material (Tables A.2 and A.3 are can be used as a guide). When the international standard materials do not they are available, national standards or other recognized ones can be used internationally. If such designations are not available, the supplier material specification, providing physical properties, Chemical composition and testing requirements will be included in the proposal.

5.12.1.3 The material specification for all exposed O-rings The pumped fluid will be identified in the proposal. O-rings must be selected and their limited application as specified in the ISO standard 21049.

5.12.1.4 Pump parts with the strength or integrity requirements of pressure is designated as "full compliance" materials from Table A.1 and They must meet all the requirements of the agreed specifications. All the other parts (for example, when corrosion resistance is the

primary concern) they only need to comply with the chemical composition specified. Materials of the auxiliary pipes are described in 6.5.

- 5.12.1.5 The provider must specify the optional tests and inspection procedures that are necessary to ensure that the materials are satisfactory for the service. The buyer must specify if additional tests and inspections are necessary, especially for materials used for the components or in the considered services buyer reviews. Specified Buyer Test and requirements Inspections must be identified in the 'observations' section of the page 4 of the data sheets.

5.12.1.6 The pressure casing material pump will conform to next

a) the pressure of the parts of the double casing pumps must to be made of steel or of carbon steel alloy;

b) The pressure components of the pump box that will handle liquids flammable or hazardous materials must be made of carbon steel or alloy steels;

c) cast iron construction can be provided by other services.

5.12.1.7 If the austenitic stainless steel parts are exposed to conditions that can promote intergranular corrosion are to be manufactured, faced with, overlaid or repaired by welding, These will be made of low carbon flights or grades. stabilized. Overlaps note or hard surfaces that contain more than 0.10% of carbon can sensitize both low carbon emissions and stabilized austenitic stainless steel grades minus a buffer layer which is not sensitive to intergranular corrosion is applied.

- 5.12.1.8 If specified, the supplier must provide certificates of materials that include the chemical and mechanical analysis properties of the calories from which the casting and forging material supplied contains pressure, drivers, and axes. Unless otherwise specified, the pipe nipples, auxiliary pipe components, and bolts are excluded from this requirement.

- 5.12.1.9 The buyer must specify the erosive and corrosive agents. (including trace amounts) present in the process fluids and in the environment of the work, including the components that may cause stress corrosion cracking or attacking elastomers.

The typical agents of interest are hydrogen sulfide, amines, chlorides, bromides, iodides, cyanides, fluorides, naphthenic acid and acid Other agents that affect the elastomer selection include ketones, ethylene oxide, sodium hydroxide, methanol, benzene, and solvents.

- 5.12.1.10 If specified, coatings of one type according to the the buyer and the seller will apply to drivers and other wet parts for minimize erosion. If the coatings are applied to the components rotational, the acceptance balance will take place after they have been applied coatings. The sequence of the balance procedures and coating of rotating components will be agreed upon. The section of "observations" from page 2 of the data sheets should be used for indicate the coating requirements.
The rotating parts must be balanced before coating in order to to minimize the balance corrections to the covered areas. By minimizing the area to be covered, a final trial balance may not be the repair of the coating is necessary.

5.12.1.11 If coupling pieces such as steel bolts and nuts are used stainless or materials with similar tendencies austenitic scratching, they must be lubricated with a compatible anticonvulsant compound specified material(s) and process fluid(s).

The necessary torque values to achieve the preload necessary can vary considerably depending on the lubricant for rings.

- 5.12.1.12 The buyer must specify whether reduced ones will be provided hardness materials according to NACE MR0175. If not specified the materials of reduced hardness, ferrous materials not covered by NACE MR0175 will have a yield strength of less than or equal to 620 N/mm2 (90,000 psi) and a hardness not exceeding 22 HRC. The components that are manufactured by Welding must be after welding, heat treatment, if applicable. necessary, so that both the welds and the areas affected by heat they meet the elastic limit and hardness REQUIREMENTS.

The following will be applied:

a) At a minimum, the requirements of 5.12.1.12 apply to the following components:

the pressure of the box;

2) axle system (including wet axle nuts);

3) Retention pressure components of the mechanical seal (excluding the faces of the seal)

4) moistened bolts;

bowls.

Parts of the double casing inner pump that are found in the compression, such as diffusers, are not considered parts of the housing of pressure. In some applications, it may be desirable to apply this requirement to the drivers.

b) wear rings of the renewable impeller that must be hardened continuously above 22 HRC for proper operation
The pump will not be used in sulfur services. Wear rings.
it can be hardened surface or coated with a coating suitable. If approved by the buyer, instead of furniture rings of renewable wear, wear surfaces can be surface hardened or hardened by the application of an appropriate coating.

The buyer must specify the quantity of H_2So wet that they can to be present, taking into account the normal operation, the startup, off, in a sleep state, disorders or unusual conditions, such as como la regeneración del catalizador.

d) The application of MR0175 is a two-step process. First, we determines the need for special materials and, second, the materials are selected. The specification of this clause implies that the the buyer has determined the need and the results in terms of limited hardness.

In many applications, small amounts of wet H2S are sufficient to require materials resistant to sulfide cracking due to corrosion tension. If there are traces of wet H2S, it is known that they are presents or if there is any doubt about the amount of wet H2S What may be present, the buyer must note on the data sheet. that requires materials resistant to sulfide stress cracking corrosion tension.

5.12.1.13 Steel performed a practice of coarse austenitic grain size (like ASTM A 515) is not used. Only fully dead steels are used or normalized carried out in fine grain practice.

5.12.1.14 If the dissimilar materials have significantly different electrochemical potentials come into contact in the presence of a electrolytic solution, galvanic pairs can be created that can provide place for a serious corrosion of the less noble material. The seller must select the materials to avoid the conditions that may lead to the galvanic corrosion. When such conditions cannot be avoided, the the buyer and the seller will agree on the selection of materials and other necessary precautions. From the NACE Corrosion Engineer Reference the book is a source for selecting the appropriate materials in these situations.

5.12.2 FOUNDRY

5.12.2.1 The surfaces of the cast parts must be cleaned with a jet of blasting, shot blasting, chemical cleaning, or any other standard method for

satisfy the visual needs of MSS-SP-55. Separation fins of molds and remains of doors and elevators must be skipped, archived or earth color.

The use of garlands in die casting will be kept to a minimum. The garlands must be clean and free of corrosion (allowed to be coating) and a composition compatible with casting. Rosaries do not they will be used in casting driver.

5.12.2.3 Iron pressure barrier and cast iron impeller cannot be repaired by welding, shot blasting, covering, burning, or impregnation, except as is specifies in 5.12.2.3.a) and 5.12.2.3.b)

a) weldable grades of cast steel can be repaired by welding according to 5.12.3. Welding repairs shall be inspected according to the same quality standard used for inspect the quality.

b) Cast iron castings can be repaired by connecting within the limits of the corresponding material specification. The holes for The plugs must be examined carefully, using liquids penetrating, to ensure that all defective material has been removed. All repairs not covered by the specifications of material will be subject to the buyer's approval.

5.12.2.4 The completely closed tubular gaps will not be used, quedan totalmente encerrados por métodos tales como taponamiento, welding or assembly,

- 5.12.2.5 If specified, for the casting of repairs made in the seller's store, repair procedures, including maps of welding will be subject to the approval of the buyer. The buyer must specify if approval is required before proceeding with the repair. The repairs made in the field of casting must be controlled. for the specification of the casting material ('production specification').

5.12.2.6 Pressure containing carbon steel castings will be provided in the condition of normalized and tempered.

5.12.3 WELDING

5.12.3.1 Welding and repair welding must be carried out by the operators and in accordance with the qualified procedures for the requirements from Table 10. Alternative standards may be proposed by the provider to obtain buyer approval. The welding and the data sheet of Material control in Annex N can be used for this purpose.

Table 10 - Welding Requirements

Requirement	Applicable code or standard
Qualified welder/operator	ASME IX or EN 287
Requirements for the welding procedure APPLIC	ABLE STANDARDS material or, when

	welding procedures are not covered by the material specification, ASME IX or EN 288
No welding pressure retention No welding structural, such as base plates or supports	ng pressure retention structural, such as base plates or supports
Magnetic particles or penetrant liquids ASME analysis of the edges of the plate	VIII, Division 1, UG-93 (d) (3)
After the welding of treatment Applicable thermal	material data or ASME VIII, Division 1, UW 40
Después de la soldadura, el tratamiento thermal of the shell welds of Division manufacturing	Datos del material aplicable o ASME VIII, I

The supplier will be responsible for the review of all repairs. and repair welds to ensure they are properly treated thermally and non-destructively examine the strength and compliance of the current qualified procedures (see 5.12.3.1 and 7.2.2.1).

5.12.3.3 Pressure containing housings made of forged materials or combinations of forged and cast materials will adjust to the conditions specified in 5.12.3.3.a) to 5.12.3.3.c). These requirements do not apply to the box of nozzles and auxiliary connections, see 5.12.3.4.

a) Accessible surfaces of welds must be inspected by magnetic particles or penetrant liquids examination after return sharpening or roughing and again after post-welding, treatment thermal or, for austenitic stainless steels, after annealing.

b) Pressure contains welds, including coating welds the axial and radial joint of the flanges will be penetration welds total.

c) When the dimensional stability of components such as housing it must be ensured for the integrity of the pump's operation, to continuation will take place after the treatment welding thermal regardless of thickness.

5.12.3.4 Welded connections to pressure guts must be installed as specifies in 5.12.3.4.a) through 5.12.3.4.e).

a) The union of the suction and discharge mouths will be made by means of-full fusion, full penetration welds. Neck for welding brackets will be used for pumps that handle flammable liquids or dangerous. Diferent metal welds will not be used.

b) Auxiliary piping welded to alloy steel enclosures must be a material with the same nominal properties as the material of the cover or will be made of low carbon austenitic stainless steel. Others materials compatible with the coating material and services destined can be used with the buyer's approval.

c) after welding, heat treatment, if necessary, will be carried out a cabo después de que todas las soldaduras, incluyendo soldaduras de pipelines have been completed.

If specified, proposed connection designs will be presented to the buyer for their approval before manufacturing. The drawing must show welding designs, size, materials, and pre-welding and post-welding thermal treatments.

e) suction and discharge welds of the nozzles must be inspected by magnetic particles or penetrant liquids examination after returning splintered or shaved and again after post-heat treatment welding or, for stainless steels austenitic, after solution annealing. The buyer must specify whether the following additional exams will be conducted.

1) magnetic particles or penetrating liquids analysis of the welds of auxiliary connection;

2) the ultrasonic or radiographic examination of any casing weld.

5.12.4 LOW TEMPERATURE

- 5.12.4.1 The buyer must specify the design for minimum temperature of the the metal of the bomb will be put into service. This temperature will be used to establish the impact testing requirements. Normally, this will be the lesser of the minimum ambient or liquid temperature minimum pumping temperature. However, the buyer can specify a design of the minimum temperature of the metal based on properties of pump fluid, as self-cooling at reduced pressure.

5.12.4.2 No materials of construction will be used to prevent brittle failures. for the low temperature service they must be suitable for the design of minimum metal temperature according to codes and other requirements specified. The buyer and the seller commit to taking special precautions necessary regarding the conditions that can occur during operation, maintenance, transport, assembly, commissioning in progress and testing.

A good design practice should be followed in the selection of methods manufacturing, welding procedures and materials for steel furnished supplier parts that may be subject to temperatures lower than the ductile-brittle transition of pressure retention temperature. The allowable design tensions indicated for metallic materials in the internationally recognized standards, such as the ANSI Code Standards and ASME is based on minimum tension properties. Some standards do not. they distinguish between mounting, semi-dead, fully murdered the material hot rolled and normalized, they are not taken into account if the materials they were produced under fine or grain course practices. The supplier must

be careful in the selection of materials intended for services of between -30°C (-20°F) and 40°C (100°F).

5.12.4.3 The buyer must specify whether EN 13445 or ASME VIII, Division 1, they will be applied in relation to the impact assessment requirements.

5.12.4.4 The governing thickness to determine the testing requirements of the impact will be the greatest of the following:

a) the nominal thickness of the largest weld joint;

b) the largest nominal section for pressure containment, except:

1) The structural support sections, such as feet or ears;
2) sections with increased thickness required for stiffness for mitigate axis deviation;
3) structural sections necessary for the fixing or inclusion of mechanical characteristics, such as jackets or seal chambers;

c) a quarter of the thickness of the nominal flange, including the flange thickness of separation for the intestines with axial division (in the recognition of that the predominant tension strap is not a membrane stress).

5.12.4.5Si ASME VIII, Division I is specified (see 5.12.4.3), it will apply the next

a) all pressure retention steels applied to the minimum the design temperature of metal determined below -30°C (-20°F) it will have a Charpy V-notch impact test of the base metal and the joint welding unless exempt in accordance with ASME VIII, Division 1, UHA-51.

b) carbon steel and low-alloy pressure-retaining steel parts applied at a minimum the design temperature of the metal specified between -30°C (-20°F) and 40°C (100°F), testing will be required for impact in the following way:
Impact testing is not necessary for parts with a thickness of government of 25 mm (1 inch) or less.
Impact test exemptions for parts with a thickness of government over 25 mm (1 in) will be established in accordance with the paragraph UCS-66 in Section VIII, Division 1 of the ASME Code. The minimum design temperature of metal without impact tests can be reduce as shown in figure UCS-66.1. If the material is not exempt, results of the Charpy V-notch impact tests must responding to energy needs with minimal impact in the paragraph UG-84 of the ASME Code.

5.13 IDENTIFICATION PLATES AND ROTATION ARROWS

The identification plate must be securely fastened in a place
easily visible on the equipment and on any other important part of the equipment auxiliary.

5.13.2 The identification plate must be marked with the following units
to be filled out in accordance with the data sheet:

a) buyer's article number;

b) Supplier surface and model number;

c) the serial number of the pump;

d) The nominal flow;

the nominal head;

f) the hydrostatic test pressure of the casing;

g) Speed;

h) the manufacturer's support identification numbers (if applicable);

i) the maximum allowable working pressure (MAWP);

j) Temperature base for PSMA.

5.13.3 In addition to being stamped on the identification plate, the number of
The series of the pump must be clearly and permanently marked on the casing.
from the bomb.

5.13.4 Rotation arrows will be issued in or associated with each element.
Important for the rotating equipment to be in a clearly visible location.

6 ACCESSORIES
6.1 DRIVERS

- **6.1.1 The buyer must specify the type and specification of the controller**
necessary.

6.1.2 The driver must:

a) to be suitable for satisfactory operation under the conditions specified site;

b) to be suitable for the conditions of specific public services;
be of a size to accommodate all process variations specified, such as changes in pressure, temperature, or properties of the liquid handled;

d) be of a size to accommodate all the startup operations
march conditions.

the dimensions necessary to meet the maximum conditions of
specified operations, which represent all losses (for example,
bearing, mechanical seal, external gears, and the losses of
coupling).

6.1.3 Motors will have power ratings, including the service factor (if the
at least equal to the power percentages to the pump of the
nominal conditions given in Table 11. However, the power in the
nominal conditions should not exceed the values of the plate
engine identification. When it is considered that this procedure will give
place to unnecessary over-dimensioning of the engine, a proposal
alternative that will be submitted for the buyer's approval.

Table 11 - Motor unit powers

Motor plate value		Percentage of the nominal power of the bomb
kW	(hp)	%
< 22	(< 30)	125
22 to 55	(30 to 75)	115
55	(> 75)	110

- The buyer must specify the type of engine, its characteristics and
the accessories, including the following:

a) the electrical characteristics;

b) the initial conditions (including the expected voltage drop of
departure);

c) the type of enclosure;

d) Sound pressure level;

e) the classification of areas;

f) type of insulation;

g) Required service factor;

h) the ambient temperature and the altitude above sea level;

i) transmission losses;

j) temperature detectors, vibration sensors and heaters if they are
necessary;

k) the vibration acceptance criteria;

the applicability of the IEC 60034 standard, API 541 or IEEE 841.

6.1.5 sharing torque capabilities of the conductor will exceed the torque requirements machine speed driven. Unless otherwise specified, the
the motor will be able to accelerate the pump to the nominal speed of 80% tension against a closed discharge valve.
Some pumps are equipped with bypasses, and the conditions of alternative accounts should be used.

6.1.6 the bearings in propulsion systems designed for loads
The radial or axial transmission of the pump must meet the following requirements.

a) The bearings should be selected to provide a nominal life of in accordance with ISO 281, which is equivalent to at least 25,000 hours in continuous operation under nominal conditions of the pump.

b) The bearings must be selected to provide a nominal lifespan. equivalent to at least 16,000 hours when carrying the maximum load (radial or axial or both) imposed with internal spaces of the pump in the double of the design values and when operating at any point between the minimum stable and continuous flow and the nominal flow. Vertical motors 750 kW (000 hp 1) and larger that are equipped with roller bearings spherical or conical have a lifespan of less than 16,000 hours at worst conditions to avoid skidding during normal operation. In such cases, The supplier must indicate the shortest shelf life in the proposal.

c) For vertical engines and right angle gears, the bearing of the push must be on the opposite side of the drive and will limit axial float of 125 mm (0.005 in).

d) Single row deep groove bearings will have radial play according to the ISO 5753 standard Group 3 [greater than 'N' (Normal) internal play]. single or double row bearings will not have filling slots (type Conrad).

NOTE the effects of this provision, ABMA 20 Group 3 is equivalent to ISO 5753 Group 3.

e) The thrust bearings must be designed to carry the thrust maximum of the pump can be developed during startup, shutdown, or that operate at any flow.

f) the hydrodynamic axial bearings shall be selected at no more than 50% of the manufacturer's rating of the bearing in double the Internal spaces of the pump are specified in 5.7.4.

6.1.7 Unless otherwise specified, the pump motors
verticals will have solid shafts. If the thrust bearings of the pump are

in the engine, the motors must meet the tolerances of the shaft and the base is shown in Figure 31.

6.1.8 Unless otherwise specified, turbine drivers of
vapor will adjust to the ISO 10436 or API 611 standard. Turbine drivers steam must be sized to continuously deliver 110% of the nominal power of the pump under normal steam conditions.

6.1.9 Unless otherwise specified, the gears must comply with API 677.

6.1.10 The drive train components that have a mass greater than 225kg (500lb), the equipment base must be equipped with vertical lift screws.

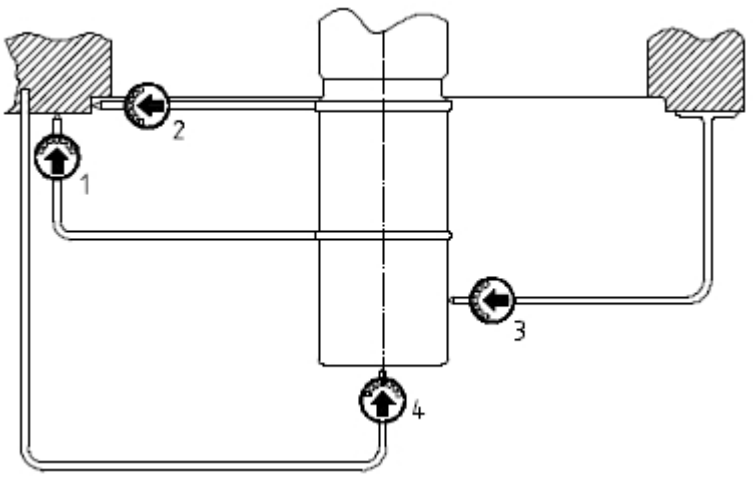

key
1. Coupling face of the shaft to the conductor by perpendicular and flatness of surface 25 mm (0.001 inch) TIR
2. Axis to conductor maximum recorded offset 100 mm (0.004 in) TIR
Maximum axis deviation with rotor freely rotating 25 mm (0.001 in) TIR
4. Maximum axial float 125 mm (0.005 in) TIR
All measurements will be taken with the driver mounted in a vertical position.

Figure 31 - The vertical suspended pump drivers required tolerances for the motor shaft and the base

6.2 COUPLINGS AND PROTECTORS

6.2.1 Couplings and guards between the conductors and the driven equipment

They will be supplied and installed by the pump manufacturer.

6.2.2 Any flexible metallic element spacer couplings according to AGMA 9000 Class 9 is provided. In addition, the couplings must be. comply with the following:

a) the flexible elements must be made of corrosion-resistant material;

b) The couplings must be designed to maintain the spacer if a flexible element breaks;

c) coupling cubes will be made of steel;

the nominal spacer length will be at least 125mm (5 in) and will allow the removal of the coupling, bearings, seal, and the rotor, in its case, without disturbing the driver or the suction and discharge piping;

e) The couplings operating at speeds exceeding 3,800 r/min must comply with the requirements of the ISO 10441 or API671 standard for the balance of the components and review the assembly balance.

- 6.2.3 If specified, couplings must be balanced according to the standard. ISO 1940-1 grade G6.3.

- **6.2.4 If specified, couplings must meet the requirements of the** ISO standard 14691, ISO 10441, and API 671.

6.2.5 Information about the axes, groove dimensions (if any), and the movements of the end of the axis due to finishing the game and the effects Thermal inputs will be provided to the manufacturer that supplies the coupling.

6.2.6 Unless a proprietary fastening device is specified (see section 6.2.11), flexible couplings are keyed to the shaft. Keys, keyways, and adaptors must comply with AGMA 9002, commercial class.

6.2.7 Couplings and coupling at axis joints must be classified by the less, the maximum power of the conductor, including the service factor.

6.2.8 For major axis diameters of 60mm (2.5 in) and, if necessary for remove the coupling hub to service the mechanical seal, the hub It must be assembled with a tapered fitting. The tapered coupling form for The coupling key must be 1 in 16 [60mm / m (0.75 inches/feet), diametral]. Other mounting methods must be approved by the buyer and the seller. Coupling centers with cylindrical holes can be supplied with sliding fits the axis of the fastening screws and what it has to do with the key.
Proper assembly and maintenance procedures must be usados para asegurar que los acoplamientos forma de cono tiene un ajuste de Interference. Sliding fits in cylindrical holes allow for adjustment of the axial coupling position in the field without the application of heat. Alternative spark plugs can be used if specified by the buyer.

6.2.9 Coupling hubs designed for interference fits on the shaft they must be equipped with threaded holes at least 10mm (0.38 inches) in size to facilitate removal.

- 6.2.10 If specified, hydraulic couplings will be installed.

- 6.2.11 If specified, couplings will be provided with a device of patented fastening. Acceptable fastening devices may include bushes conical, friction locking sets, and contraction discs. The supplier responsible for the final machining of the cube drill should be selected rating device / appropriate size to fit coupling and the application.

Care must be taken in the selection of these devices as some do not are inherently self-centered and can introduce eccentricity and the imbalance in the coupling set. This effect will be evaluated and allowed the determination of potential coupling imbalance

Arrangements will be made for the connection of alignment equipment axes without the need to remove the spacer or disassemble the coupling of no way.

NOTE: One way to achieve this is to provide at least 25 mm (1 inch) of free axle between the coupling hub and the housing of bearing, where alignment supports can be located.

6.2.13 If the supplier is not needed to install the conductor, machining the complete medium coupling must be delivered to the plant of manufacturer of the controller or any other designated location, along with the necessary instructions for the assembly of the coupling device on the conductor axis.

Each coupling will have a coupling guard that can be remove without disturbing the linked elements and must comply with the following requirements:

- a) coupling guards must include the coupling and the shafts for prevent personnel from coming into contact with moving parts during the performance of the equipment train. Allowed access dimensions they must comply with the specified standards, such as ISO 14120, EN 953 or ASME B15.1.

b) The guards must be constructed with sufficient rigidity to withstand 900 N. (200 lbf) static point load in any direction without the shield contact with the moving parts.

c) the protectors must be made of solid sheet or plate without openings. Guards made from expanded metal or sheets perforated can be used if the size of the openings does not exceed 10 mm (0.375 in). Guards must be constructed with materials of steel, brass or non-metals (polymer). No protectors will be used

wire mesh. If specified, they will be supplied not to produce sparks agreed material guards.

6.3 BASE PLATES

6.3.1 single piece drainage or drain base plates are supplied with
ends of horizontal pumps. The edge or in a pan of the base plate
They must have a slope of at least 1 inch towards 120 at the end.
from the pump, where there is an opening of at least DN 50 (NPS 2)
threaded drainage for complete drainage.

6.3.2 The base plate will extend under the pump and the components.
of the drive train so that any leakage is contained within
the motherboard. To minimize accidental damage to the components, all
the pipe joints and the pipe flange faces, including the pump of
suction and discharge of the flanges must be within the drainage tray or
collection area edge of the drainage. The rest of the projections of the
supplied equipment must be within the maximum perimeter of the plate
base. Large junction boxes may protrude from the perimeter of
the motherboard with the buyer's approval.

- **6.3.3 Mounting pads are provided for the pump and all**

the components of the transmission train, such as motors and gears. The
pads must be larger than the foot of the mounted equipment, for
allow the leveling of the base plate without the need to remove the equipment. The
The pads must be completely machined, flat, and parallel.
Corresponding surfaces must be in the same plane at 150mm/m.
(0.002 inches/feet) distance between the rotors. If specified, this
requirement will be demonstrated at the pump manufacturer's store before
assemble the team and with the support motherboard and it is held in the holes of the
only foundation bolts.
Base plate flatness installed may be affected by the procedures of
transport, handling, and installation beyond the scope of the supplier. Practices
installation in API RP 686 must be followed.

6.3.4 Wedges will not be used under the pump. All pads of the
componentes del tren de mando deberán ser ajustados para tener en th e
installation of wedges at least 3 mm (0.12 inches) thick each
component. If the seller assembles the components, a set of wedges.
stainless steel at least 3 mm (0.12 inches) thick, it
will contribute. Shim packs are no thicker than 13 mm (0.5 in), nor contain
more than 5 wedges. All wedge packages rest on the pins of
clamp and vertical leveling screws and extend at least 5 mm (1/4
inches) beyond the outer edges of the equipment feet. If the seller
The components are not mounted, the pads were not drilled, and not
they provided supplements.

6.3.5 To minimize the misalignment of the pump and the controller
axes due to the load effects of pipes, the pump, and its base plate
it must be built with sufficient structural rigidity to limit the

displacement of the pump axis at the drive end of the shaft or in the adjustment record, the coupling cube to the indicated values in the table 12 during a conformity test with 6.3.6. Grout cannot be use as a means to obtain the required stiffness.
It is recognized that the slurry can significantly increase the stiffness of the motherboard, by overlooking this fact, the adjustment of the motherboard you can easily check in the seller's store.

- 6.3.6 If specified, the supplier must perform tests to demonstrate that the pump and the base plate, anchored in the foundation location of the bolt holes, are in compliance with 6.3.5. The pump housing it must be subjected to MYC and MZC moments applied to any nozzle, but not both, in such a way that the displacements of the axis corresponding can be measured and recorded. MYC and MZC are not will be applied simultaneously to any nozzle. The measurements of axis misalignment should be absolute (not in relation to the plate base). For registration purposes, the supplier's test data will include a schematic drawing of the start-up test, the moment loads calculated (MYC and MZC), and the applied moment loads and their corresponding displacements at the drive end of the axis of the bomb.

6.3.7 The bottom of the base plates manufactured below the pump and the conductor supports are welded to reinforce the crossbars and the members It is formed to positively block in the grout.

Table 12 - acceptance criteria for the stiffness test

Motherboard intended for grouting		Motherboards not intended for injection	
loading conditions	Pump of displacement of axis m (in)	Pump of displacement of the axis m (in)	Address
MYc	175 (0.007)	125 (0.005)	+Z
MZc	75 (0.003)	50 (0,002)	-Y

MYc and MZc equal the sum of the permissible suction and nozzle moments. download of Table 4.
MYc = (MI) of suction + (MI) of discharge
MZC = (MZ) de succión + (MZ) descarga

6.3.8 All joints, including the cover plate of the elements estructurales, serán sellar permanentemente soldada para evitar corrosión de the crack. Welding stitch, up or down, is unacceptable.

6.3.9 All motherboards must be equipped with at least one hole for nozzle that has a free area of at least 125 cm^2(19in^2) and the dimension of less than 75 mm (3 inches) in each closing section. These holes will be to allow the complete filling of the cavity beneath the base plate without the creation of airbags. If possible, the holes should be accessible for the filling of the pump and the motor installed on the base plate. Holes Grout in the drip tray area will have raised lip edges of 13 mm.

(0.5 inch) If the holes are located in an area where liquids could affect the exposed grout, metal covering with a minimum thickness of 1.5 mm (0.06 in, gauge 16), will be provided. The ventilation holes of the minus 13 mm (0.5 inches) in diameter will be provided at the highest point height of each closure section of the motherboard

6.3.10 The outer corners of the base plate in contact with the mortar they must have radii in the floor plan view of at least 50 mm (2 in) (see the Figure D.1 of Annex D.

6.3.11 The bottom of the base plate between the structural members it will be open if the motherboard is designed to be installed and grouted to a concrete base. Accessibility will be provided for the grouting underneath all load support members. The bottom of the base plate It must be on a level to allow the use of a single-level base.

6.3.12 If the controller and the size of the permanent wave pump, motherboards will have the standardized dimensions specified in Annex D and will be intended for grouting. These base plates are called 'plates standard base, Numbers 0.5 to 12.

- 6.3.13 If specified, the base plate and the pedestal support assembly It must be rigid enough to be mounted without grout.

6.3.14 leveling screws positioning transverse and axial alignment provide for the components of the transmission system with a mass greater than a 250 kg (500 lb) to facilitate horizontal and longitudinal adjustments transverses. The heels of these positioning screws are join it to the motherboard in such a way that the protrusions do not interfere with the installation or removal of the component. These screws must be at least M12 (1/2 "-13). To avoid distortion, machining of mounting seats it should be deferred until the welding on the base plate in the The mounting pad proximity has been completed.

6.3.15.Vertical leveling screws spaced for stability are they will be secured on the outer perimeter of the motherboard. They will be located together with anchor bolts to minimize distortion during the process installation. These screws must be numerous enough to support the weight of the motherboard, the pump, and the components of the train actuation without excessive deformation, but in no case will they be provided with less than six screws.

6.3.16 The height of the centerline of the pump shaft above the plate the base will be minimized. Adequate space is provided between the drainage connection of the housing and the base plate so that the pipe Drainage of the same size as the connection can be installed without the use from a corner of the street.

6.3.17 The seller who commercially sandblasts, in accordance with ISO 8501 Grade Sa2 or SSPC SP 6, all surfaces of

nozzle contact of the motherboard, and the layer of those surfaces with a primer compatible with epoxy grout.
Different epoxy grouts may require surface preparation alternative. The strength of the complete epoxy joint is not generally necessary (6.3.7).

The base must be equipped with at least one lifting eye. elevation of four points. Raise the base plate, complete with all the mounted equipment should not permanently or otherwise distort way to damage the motherboard or the machinery mounted on it.

6.3.19 The anchor bolts are the responsibility of the buyer. The supplier it must provide sufficient bolt anchorage to resist the forces of nozzle reaction of the pump during startup and operation.

6.3.20. Lifting attachments fixed to the equipment must be designed using a maximum allowable stress of one third of the minimum yield strength specified of the material.

6.4 INSTRUMENTATION

6.4.1 Medidores:Si amueblado, indicadores de temperatura y manómetros They must comply with the ISO 10438 standard.

NOTE: For the purposes of this provision, API 614 is equivalent to the standard ISO 10438.

6.4.2 VIBRATION, POSITION, AND TEMPERATURE DETECTORS

- 6.4.2.1 If specified, accelerometers are supplied, installed and tested according to API 670.

- 6.4.2.2 Selective shutdown of devices with hydrodynamic bearings will be available. the necessary equipment for the mounting of two radial vibration probes at each bearing housing, two axial position probes at the thrust end of each machine, and a probe of an event for the revolution in each machine. The purchase must specify whether the seller is delivering these detectors. The detectors and those for mounting and calibration must be supplied, installed and tested according to API670.

- 6.4.2.3 If specified, hydrodynamic thrust and radial bearings they will be equipped with temperature detectors that carry metal. If the pressure hydrodynamic thrust lubrication and radial bearings are supplied with temperature detectors, the detectors and their mounting and calibration will be supplied, installed, and tested in accordance with API 670.

- 6.4.2.4 If specified, monitors with connection cables to the vibration, the axial position or temperature sensors will be supplied and / or installed according to API 670.

6.5 PIPES AND THEIR ACCESSORIES
6.5.1 GENERALS

6.5.1.1 The pipes must comply with the ISO 10438 standard.

6.5.1.2Auxiliary systems are defined as piping systems that they are found in the following services:

a) the auxiliary process fluids;

the steam

c) cooling water;

d) lubricant oil (see 8.2.6).

Auxiliary materials of the system will be in accordance with Annex H, Table A.5.

Auxiliary connections are described in section 5.4.3.

6.5.1.3 The piping systems will be fully assembled and installed. If this requirement due to difficulties in transportation and handling, measures alternatives are acceptable with the buyer's approval.

- **6.5.1.4 If specified, liquid storage barrier/buffer shall be** designed for the mounting of the pump's motherboard and are sent by separate. These deposits must be fully assembled, except that the fluid circulation pipe is not supplied.

The supplier must provide and locate all systems of pipes, including their mounted accessories, within the limits of the plate base.

- **6.5.1.6 If specified, each piping system will be made of pipe** distribution at the entrance of a single buyer or output connection near the edge and within the confines of the motherboard.

NOTE The technical sheet allows the selection of this option for the output of humus, cooling and drainage water.

- 6.5.1.7 The bolting requirements of 5.1.31 apply to the connection of auxiliary piping for the equipment. Flange bolt in piping systems stainless steel in the lubricating oil service does not have to be made of steel. stainless unless specified. If the buyer does not specify stainless steel fasteners should be made of low-alloy steel (for example, ASTM A 193 Grade B7) and the buyer will need to specify if they are going to paint (such as by PTFE coating or galvanizing according to the standard ASTM A) 153) or painted.

6.5.1.8 plugs must comply with 5.4.3.7.

6.5.2 AUXILIARY PROCESS FLUID PIPELINE

6.5.2.1 auxiliary process fluid pipes include vent lines, drainage lines, balance lines, product reddening lines and external fluid injection lines.

6.5.2.2 Pipe components must have a pressure-temperature rating. at least equal to the PSMA of the pump body, but in no case will it be inferior to the ISO 7005 PN50 standard (ASME Class 300) Flange at temperature environment (5.3.5).

6.5.2.3 The pipes and components subject to the process fluid must have a corrosion/erosion resistance equal to or better than that of the case. Otherwise, all components will be made of steel.

- **The buyer must specify whether chlorides are present in a** concentration greater than 10 mg/kg (parts per million by weight). Caution it should be used if the stainless steel application.

6.5.2.5 openings shall not be less than 3 mm (0.12 inches) diameter.

6.5.2.6 Unless threaded vent valves are specified and Drain connections must be plugged. Carbon steel plugs. they can be used with cast iron housings.

6.5.2.7 If heating or cooling is provided, each component the heat exchanger must be suitable for the process fluid and water cooling to which it is exposed.

- 6.5.2.8 In addition to the requirements of 6.5.2.1 through 6.5.2.7, for the pipes that contain flammable or hazardous liquids, the buyer must specify if brackets are required instead of the socket welded joints.

6.5.2.9 Threaded joints may only be used in casting equipment and the instruments.

6.5.3 WATER COOLING PIPES

6.5.3.1 The arrangement of the cooling water pipes shall comply with Annex B, Figure B.2 to Figure B.9, as applicable.

6.5.3.2 The cooling water pipes must be designed for the conditions in 5.1.22.

6.5.3.3 Visual flow indicators will be provided on each line.
exit.

6.5.3.4 Unless otherwise specified, the valves will be supplied
in all inlet and outlet connections of the distribution pipe.

6.6 SPECIAL TOOLS

6.6.1 If special tools and accessories are needed for disassembly,
to set up or maintain the unit, which will be included in the budget and furnished
as part of the initial offer of the machine. For unit installations
multiple, the requirements for quantities of tools and accessories
Specials must be approved by the buyer and the seller. These
special tools or similar will be used during the store assembly and
después de la prueba el desmontaje de los equipos.

6.6.2 If special tools are provided, they must be packaged in
separate metal boxes, sturdy and marked "special tools for
(label/item number)." Each tool will be sealed or labeled.
to indicate its intended use.

7 INSPECTION, TESTING AND PREPARATION FOR TRANSPORT
7.1 GENERALITIES

7.1.1 After the buyer's prior notification to the seller,
the buyer's representative must have access to all facilities of
the suppliers and sub-sellers in the manufacturing, testing, or inspection of the
the team is in progress.

7.1.2 The supplier must notify subcontractors of the inspection of the
buyer and of tests.

7.1.3 The supplier must provide sufficient advance notice to the buyer.
before carrying out any inspection or test that the buyer has
indicated that it should be seen or observed.

- 7.1.4 The buyer must specify the scope of their participation in the inspection and tests.

a) If workshop inspection and tests have been specified, the buyer and
The seller must coordinate waiting points and visits for manufacturing.
the inspectors.
The planned dates for the tests will be communicated at least 30
days in advance and the actual confirmed dates as agreed.
Unless otherwise agreed, the seller must give at least five days.
advanced notification skills for an inspection or witness test
observed.

In the smaller pumps, where the configuration and timing test is short, five days in advance may require that the pump be removed from the test bench between the preliminary tests and the testimony.

All inspections and witness tests are the waiting points. For the observed tests, the buyer must wait to be in the factory more than a witness test.

c) If specified, mechanical witness and performance tests are requires a written notification of a successful preliminary test. The the seller and the buyer will come to an agreement if the set of tests The follow-up is whether to keep it or if the machine can be removed from the testing platform among exams, tests, and witnesses.

Many buyers prefer not to have preliminary tests before the witness tests to understand the difficulties encountered during the tests. If this is the case, buyers must make it clear to seller.

7.1.5 Equipment, materials, and services for inspections and tests specified will be paid by the seller.

- **7.1.6 If specified, the buyer's representative, the representative of** manufacturer or both must indicate compliance with the list of verification of an inspector as provided in Annex E of the rubric, the appointments and the presentation of the complete checklist for the buyer beforehand of the shipment.

7.1.7 The buyer's representative must have access to the program supplier quality for your review.

7.2 INSPECTION
7.2.1 GENERAL

- 7.2.1.1 The provider must keep the following data available for less than 20 years.

the necessary and specific certification of materials, such as the mill test reports.

b) The test data and the results to verify that they have fulfilling the requirements of the specification.

c) If specified, the details of all repairs and the records of all the heat treatment carried out as part of a procedure of repair.

d) The results of quality control tests and inspections.

e) How to build operational spaces.

f) Other data specified by the buyer or required by the laws and applicable regulations (see 9.3.1 and 9.3.2)

7.2.1.2 parts subjected to pressure will not be painted until the inspection is specification and testing of the parts has been completed.

- 7.2.1.3 In addition to the requirements of 5.12.1.5 The buyer may specify the following.

a) The parties that are subject to the surface and the exploration of the subsurface.

b) The type of exam requires, like magnetic particles, liquids penetrating, radiographic and an ultrasound examination.

7.2.1.4 All preliminary operation tests and controls mechanical repairs must be carried out by the seller before the inspection of buyer.

7.2.2 MATERIAL INSPECTION

- **7.2.2.1 NDE will be carried out as required by the specifications** of the material. If, by ultrasound, additional radiographic magnetic particles The exams using penetrant liquid for the welds or materials are specified by the buyer, the methods and acceptance criteria will be made in accordance with the standards shown in Table 13. Standards alternatives may be proposed by the provider or specified by the buyer. The welding and the material control data sheet in the Annex They can be used for this purpose.

- **7.2.2.2 If specified, the buyer may inspect the cleanliness of the** equipment and all pipes and their accessories supplied by or through the distributor before assembly.

- **7.2.2.3 If specified, the hardness of the parts, welds, and areas** those affected by the heat will be checked to see if they are within the values permitted by the test. The method, the scope, the documentation and the The testimony of the tests must be approved by the buyer and the seller.

Tabla 13 - Normas de inspección Materiales

Type of inspection	Methods	Acceptance criteria	
		For manufacturing	For casting
X-ray	Section V, articles 2 and 22 of the ASME Code	Section VIII, Division 1, UW-51 (for 100% radiography) and UW-52 (for the spot radiography of	Section VIII, Division 1, Appendix 7 of ASME Code

		ASME Code	
Inspection ultrasonic	Section V articles 5 and 23 of ASME Code	Section VIII, Division 1, annex 12, of ASME Code	Section VIII, Division 1, Appendix 7, of ASME Code
Inspection of magnetic particles	Section V, articles 7 and 25 of ASME Code	Section VIII, Division 1, Appendix 6 of ASME Code	Section VIII, Division 1, Appendix 7, of ASME Code
Inspection of penetrating liquids	Section V, Articles 6 and 24 of ASME Code	Section VIII, Division 1, Appendix 8 of ASME Code	Section VIII, Division 1, Appendix 7, of ASME Code

7.3 TESTS
7.3.1 GENERAL

7.3.1.1 The performance and NPSH tests will be carried out using the methods of the ISO 9906 grade 1 standard, HI 1.6 (for centrifugal pumps) or HI2.6 (for vertical pumps), except that the efficiency will be of a character merely informative and not rating. Performance tolerances must be agreement with Table 14.

7.3.1.2If specified, at least 6 weeks before the first test of programmed operation, the supplier will present to the buyer, for their review and comments, the detailed procedures for all tests of operation and all the optional tests specified (7.3.4), including the acceptance criteria for all monitored parameters.
7.3.1.3 The mechanical seals will not be used during the hydrostatic test. but they can be used in functionality or performance tests.

7.3.2 HYDROSTATIC TEST

All components of the pressure casing must be tested. hydrostatically with the liquid at a minimum of 1.5 times the pressure of maximum authorized service, with the special provisions that are specified below.

a) Double casing pumps, horizontal multistage pumps, pumps of integral gears (as described in 5.3.6), one of the others special design pumps approved by the buyer may be Segment test.

b) passages and components, including jackets for the bearings, the sealing cameras, oil coolers, and sealing coolers
The refrigeration systems will be tested at a minimum pressure of 1,000 kPa (10 bar). (150 psi).

c) Vapor, cooling water and the lubricant oil pipes, if it is made by welding, they must be tested at 1.5 times the pressure maximum operational caliber or 1,000 kPa (10 bar) (150 psi), whichever is mayor.

d) The test liquid must be at a temperature above null ductility transition temperature of the material being tested.

e) The gaskets used during the hydrostatic testing of a housing to assembly pressure, fewer seal glands, must be the same design that is supplied with the pump.

Hydraulic tests are allowed without the seal connection plate or the sealing camera installed. If a connecting plate made of material is used from the foundry or the sealing chamber, is hydrostatically separately to the same pressure requirements as the pressure housing.

Table 14 - performance tolerances

Condition	nominal point %	Valve %
Nominal differential load		
0 m to 150 m (0 ft to 500 ft)	-2 +5	+10 -10[a]
151 m to 300 m (501 ft to 1,000 ft) ft)	-2 +3	+8 -8[a]
At 300 m (1,000 ft)	-2 +2	+5 -5[a]
rated power	+4[b]	
NPSH Classification	+0	

NOTE: Efficiency is not a ranking value.
a) If an increasing head flow curve is specified (see 5.1.13), the negative tolerance specified here will only be allowed if the test curve continues to show a characteristic ascending.
b) Under any combination of the above (cumulative tolerances are not acceptable).

7.3.2.2 If the part is tested to operate at a temperature at which the the strength of a material is below the strength at which the material test temperature, the hydrostatic test pressure will be multiplied by a factor obtained by dividing the allowable working tension for the material to the testing temperature because at the nominal operating temperature. The The voltage values used will be determined in accordance with 5.3.4. For the pipes, the tension will be adjusted to the ISO 15649 standard. The pressure thus the minimum pressure at which the hydrostatic test will be conducted will be obtained. The data sheets must include actual hydrostatic pressure tests.

NOTE: For the purposes of this provision, ASME B31.3 is equivalent to the ISO standard 15649.

7.3.2.3 The chloride content of liquids used to test the materials the austenitic stainless steel will not exceed 50 mg / kg. To avoid the deposition of chlorides as a result of drying by evaporation, all the Residual liquid must be removed from the tested parts at the conclusion. of the test.

NOTE: Chloride content is limited in order to avoid cracking. stress corrosion.

7.3.2.4 The tests will be kept for a sufficient period of time
to allow the complete exploration of pieces under safe pressure. The test Hydrostatics will be considered satisfactory if there are neither leaks nor infiltrations. through the parts that contain pressure for at least 30 min. Large parts that contain pressure, heavy ones may require a testing period It will be agreed upon by the buyer and the seller. Please consult the previous page. internal closures necessary for the testing of segmented cases and the operation of a test pump to maintain pressure is acceptable. The piping systems manufactured by welding must to be hydrostatically in accordance with the requirements of the ISO 15649 standard. Gaskets used during the hydrostatic test of a mounted casing They must be of the same design as those supplied with the casing.

NOTE: For the purposes of this provision, ASME B31.3 is equivalent to the ISO 15649 standard.

The hydrostatic test liquid must include a wetting agent.
to reduce the surface tension if one or more of the following conditions.

a) The pumped liquid has a relative density (specific gravity) of less than 0.7 at pumping temperature.
The pumping temperature is greater than 260 °C (500 °F).
c) The casing is molded from a new or altered pattern.
It is known that the materials have poor moldability.

7.3.2.6 austenitic or pressure components of the stainless steel box duplex can be tested hydrostatically with an additional amount of material in the areas where machining to critical dimensions is required and tolerances. The additional amount of material should not exceed 1mm 0.040 in stock of material or 5% of the minimum allowed wall thickness, let it be smaller.
Any area that is machined after the hydrostatic test will be identified in the hydrostatic test report.

NOTE Due to the residual tensions resulting from liquid cooling final and relatively low proportional limits inherent to these materials, small amounts of permanent deformation can occur in the critical dimensions during the hydrostatic test. By allowing a small amount of material that is kept in these critical areas during the hydrostatic test, the need to add material through welding to restore close tolerance dimensions after it is avoided hydrostatics.

7.3.3 PERFORMANCE TEST

7.3.3.1 Unless otherwise specified, each pump shall
undergo a performance test. Performance tests are they were carried out using water at a temperature lower than 65 °C (150 °F).

7.3.3.2 The requirements from 7.3.3.2.a) to 7.3.3.2.h) will be met while the pump is operating on the test bench and before it is conduct the performance test.

a) The seals and the bearings of the contract will be used in the pump for the performance test.

b) If approved by the buyer, substitute stamps may be used during the performance test, if necessary to prevent damage to the condition meetings or if the contract seals are not compatible with it test fluid.

c)La junta (o sellos) no tendrá un volumen de fugas durante ninguna fase de the pump performance test is superior to the specified in the ISO 21049 standard or as agreed by the seller and the buyer. Any unacceptable leak during the pump performance test requires disassembly and repair of the joint. If the seal is disassembled or the seal must be reanalyzed with an air test from the pump with the criteria defined in 7.3.3.5 d).

When the pump is on the test bench and water is used as test fluid, suitable liquid gaskets for testing in water are present without visible signs of leaks. ISO 21049 Annex A.1.3 must be reviewed to confirm that a visible leakage zero criteria is appropriate for the seals that are being tested.

NOTE: For the purposes of this provision, API 682 is equivalent to the standard. ISO 21049.

d) If specified, seal leaks during the test will require the pump. mounted and the seal that is executed again to demonstrate the performance of the satisfactory seal.

e) All lubricant oil pressures, viscosities, and temperatures they will be within the recommended operating value range in the supplier's instruction manual for the specified unit is is testing.

f) Bearings specified to be normally lubricated from a pure oil steam system is pre-lubricated before testing of performance using a suitable hydrocarbon oil.

g) All joints and connections will be checked for tightness, and Any leaks will be corrected.

h) All warnings, protective devices, and control used During the rehearsal, it should be checked and adjusted as necessary.

7.3.3.3 Unless otherwise specified, the performance test of Accounts will be carried out as specified in 7.3.3.3.a) through 7.3.3.3.d).

a) The supplier must take the test data, including the head, the flow, the power, the proper bearing temperature(s) and vibrations, at least at five points. These points will be usually

1) of closure (no vibration data is needed),

2) stable flow continues minimum,

3) halfway between the minimum and nominal flow,

4) the nominal flow

5) of maximum allowed flow (at least, 120% of BEP).

b) The test point for the nominal flow must be within a margin a tolerance of ± 5% of the nominal flow.

In the case of high-energy bombs (see 5.1.18), pedal component, and multi-stage pumps may not be possible to test at the closure. Some low specific speed pumps cannot achieve a BEP flow of 120%.

c) Unless otherwise agreed, the test speed must be within the 3% of the nominal speed that appears on the pump data sheet (see example in annex N). Test results will be converted into the expected results in the nominal regime.

The supplier must maintain a complete detailed record of all final exams and will prepare the number of copies, certified by the correction. The data will include test curves and a summary of the test performance data compared to warranty points (see 9.2.4, 9.3.2.2, and the example in Annex M).

If specified, in addition to the formal presentation of the final data in accordance with 9.3.2.2, the curves and the test data (corrected For speed, specific gravity and viscosity will be presented within 24 hours after conducting performance tests for the engineering review of Buyer and acceptance before their shipment.

7.3.3.4 During the performance test, the requirements of 7.3.3.4.a) to through 7.3.3.4.d) will be met.

a) Vibration values will be recorded during the compliance test according to 5.9.3.2. Vibration values shall not exceed those indicated in 5.9.3.6.

b) The pumps must operate within the temperature limits that it is carried as defined in 5.10.2.4 and does not show operating signs unfavorable, such as the noise caused by cavitation.

c) When operating at nominal speed, the pumps must perform within the tolerances indicated in Table 14.

d) If specified, having peak true speeds of housing they can also be recorded for reference purposes.

The requirements of 7.3.3.5.a) through 7.3.3.5.d) were met once performance test completed.

a) If it is necessary to disassemble a pump after the test of performance with the sole purpose of machining drivers for meet the tolerances of the differential head, no new one is required test unless the reduction in diameter exceeds 5% of the original diameter. The diameter of the impeller at the time of the test. store, as well as the final diameter of the impeller, will be recorded in a curve from the store certificate test that shows the characteristics of operation after the impeller diameter has been reduced.

b) If specified, the disassembly of multistage pumps for any head adjustment (including a change of less than 5% in diameter) After the test, it will be grounds for retesting.

If it is necessary to disassemble a pump for any other correction, like the improvement of power, NPSH, or mechanical operation, the test initial must not be acceptable, and the final performance test will be held end after making the correction.

d) If it is necessary to alter the mechanical seal assembly after the performance test, or if the faces of the test seals are they were replaced by the faces of the employment seals, the final seal set the air will be the following checks:

press each independent sealing section with clean air to a test relative pressure of 175 kPa (1.75 bar) (25 psi);

2) isolate the test assembly from the pressurization source and maintain it pressure for a minimum of 5 minutes or 5 minutes for 30 liters (1 m3) of volume of rehearsal, whatever is greater;

3) the maximum allowable pressure drop during the test will be 15 kPa (0.15 bar) (2 psi).

7.3.4 OPTIONAL TESTS
7.3.4.1 GENERALES

If specified, the tests described in 7.3.4.2 will be carried out. through 7.3.4.6. Test details will be agreed upon by the buyer and the seller.

7.3.4.2 NPSHR test

7.3.4.2.1 If specified, NPSHR will be determined at each test point. (7.3.3.3.a), except for closing.

7.3.4.2.2 A 3% drop in the head (first stage of the head in the multi-stage pumps) should be interpreted as an indication of deterioration of performance. The first stage of the pump head with two or more stages can be measured using a separate connection to the stage of download fir trees if possible. If this is not possible, it must be considered only the tests of the first stage.

7.3.4.2.3 NPSHR at the nominal point must not exceed the indicated value (see the panel 14). Disassembly of NPSHR correctly requires a new test (see 7.3.3.5 to 7.4.3.1 nd).

7.3.4.3 COMPLETE UNIT TEST

If specified, the pump and the train driver, with all the auxiliaries what makes up the unit, they must be rehearsed together. If specified, it they will carry out torsional vibration measurements to verify the analysis of supplier. The complete unit test will be carried out instead of or in addition to the separate tests of the individual components specified by the buyer.

7.3.4.4 SOUND LEVEL TEST

If specified, the sound level tests will be conducted according to agreed between the buyer and the seller.

NOTAISO 3740, ISO 3744 and ISO 3746 can be consulted as a guide.

7.3.4.5 AUXILIARY EQUIPMENT TEST

If the specified equipment, auxiliary, such as the oil systems, gears and control systems were tested in the seller's store. The details of the auxiliary equipment tests will be prepared jointly by the buyer and the seller.

7.3.4.6 HAVING RESONANCE TEST OF THE HOUSING

If a resonance test is specified, the bearing box(es) are excite by impact or by other suitable means with the bomb without tube and the natural frequency (es) is determined from the response. A margin of there should be separation between the natural frequency (es) and the following ones excitation frequencies.

a) The multiples of the speed (r / min) in operation: 1.0, 2.0, 3.0.

b) The multiples of the blade passage frequency: 1.0, 2.0.

Acceptance criteria of the essay must be agreed upon between the buyer and the seller.

7.3.4.7 mechanical functioning test

 7.3.4.7.1 If specified, the pump can be operated on the test bench. tests until the oil temperature stabilizes (5.10.2.4) has been achieved.

 If specified, the pump will be operated mechanically. for four hours. Unless specified or agreed otherwise, this the term will be executed at a nominal flow rate.

 7.3.4.7.3 If specified, the start of the mechanical functioning test It will not occur until the oil temperature has stabilized.

7.4 PREPARATION FOR SHIPMENT

 7.4.1 The buyer must specify the type of transport and necessary storage. The rotors can be locked if necessary. Blocked rotors will be identified by durable labels. corrosion tied with stainless steel wire. The preparation must be done the appropriate equipment for at least 6 months of storage in the exterior from the moment of shipment, without the required disassembly prior to the operation, except for the inspection of the bearings and seals. If you contemplate storage for a longer period, the purchase must consult with the seller about the recommended procedures to follow.

7.4.2 The supplier must provide the buyer with the instructions necessary to preserve the integrity of the preparation for the storage after the equipment arrives at the workplace and before from the commissioning, which must be in accordance with API RP 686.

The equipment must be ready for shipment after all the tests and the inspection have been completed and the equipment has been released by the buyer. The preparation will include that specified in 7.4.3.1 through 7.4.3.10.

7.4.3.1 Unless otherwise specified, the pumps must not be disassembled after the final performance tests. The pump, including the sealing chamber, it should be drained as far as practical, filled with a water inhibitor that displaces within 4 hours of the test and redrained.

7.4.3.2 The exterior surfaces, except for the machined surfaces, at least one layer of standard manufacturer paint has been applied. The paint does not contains lead or chromates. Stainless steel parts do not need to be painted. The lower parts of the base plates will be prepared for the slurry in accordance with 6.3.17.

7.4.3.3 Exterior machining surfaces except for resistant materials they must be coated with an anti-corrosive.

7.4.3.4 The internal surfaces of the housing of bearing components carbon steel oil system parts "must be coated with an oil-soluble antioxidant that is compatible with the oil lubricant.

7.4.3.5 Flanged openings must be equipped with metal closures. less than 5mm (0.19 inches) thick, with elastomer joints and at least four complete bolts diameter. In the nail holes, all the nuts necessary for the service that are used to ensure the closure.

7.4.3.6 The threaded openings must be equipped with caps or plugs. steel according to 5.4.3.7.

The openings that have been beveled for welding must be provistos de cierre diseñado para evitar la entrada de materiales extraños y damages on the bezel.

7.4.3.8 The lifting points and the lifting rings must be clearly identified.

The equipment must be identified with the theme and the serial numbers. material sent separately must be identified with attached security, corrosion-resistant metal tags that indicate the item and the serial number of the equipment for which it is intended. Packed equipment it will be sent with duplicate packing lists, one inside and one on the outside from the shipping container.

7.4.3.10 axes of the view and coupling organs must be wrapped with impermeable, moldable waxed fabric or volatile corrosion inhibitor paper. The seams must be sealed with oil-resistant adhesive tape.

7.4.4 auxiliary pipe connections provided by the purchased equipment must be printing of stamping or labeling permanently according to with the supplier's connection table or general layout plan. It They will indicate service and connection designations. Symbols for all the pump connections, including the blocked connections, must be agreement with annex B.

7.4.5 Support assemblies must be completely protected against the entry of moisture and dirt. If in vapor phase, inhibitor crystals of bags are installed in large cavities, the bags will be added in an area accessible to facilitate their extraction. In your case, the bags must be installed in wire cages attached to the flange covers and locations The bag will be indicated with corrosion-resistant labels tied with wire. made of stainless steel.

A copy of the manufacturer's standard installation manual will be attached. it is included with the equipment

8 SPECIFIC TYPES OF PUMPS
8.1 SINGLE STAGE RADIALLY-DRIVEN PUMPS

8.1.1 horizontal (Type OH2)
The rear bearing housing support pump is not permitted.

8.1.2 Vertical line (type OH3)

8.1.2.1 A flat contact surface is provided at the bottom of
the casing to make the pump stable if it is isolated on a cushion or foundation. The relationship of the center of gravity unit to the height to the the width of the contact surface should not be greater than 3:1. This stability is achieved through the design of the housing or by an external support permanent.
8.1.2.2 The pumps must be designed in such a way that they can either...
float with the suction and discharge pipe, or be screwed to a platform or foundation.

The loading notch of the pump may increase if the buyer chooses the
lock to the unit down. This should be addressed in the design of pipes.

A minimum DN 15 (1/2 NPS) threaded drainage will be provided.
connection so that the liquid does not accumulate on the cover or support of controller.

The pump and the sealing chamber must be continuously
ventilated with a connection at the highest point, either in the sealing chamber or seal washing pipes. Systems that require manual purging require the buyer's approval.
If venting to the atmosphere is not acceptable, the venting must be connected. to the process piping at a height above the sealing chamber.

8.1.2.5 Pumps must be designed to facilitate extraction and the installation of the assembly after removal without removing the conductor.

8.1.2.6 If specified, a device that allows the
direct manipulation or the lifting of the assembly after withdrawal from outside the engine support with the driver in place.

8.1.2.7 With the buyer's approval, bearing boxes may be
ready for lubrication with grease (5.11.4). The temperature of the casing the stabilized bearing temperature will not exceed 82 °C (180 °F) when operating at an ambient temperature of 43 °C (110 °F). Recommended fats should be suitable for operation at these temperatures.

8.1.2.8 The drivers must be aligned in the seller's store
before its shipment.

8.1.3 INTEGRAL DRIVEN GEAR (TYPE OH6)

8.1.3.1 The impeller must be inserted or channeled into the output shaft of the reducer.

8.1.3.2 Integral gear pumps may require removal of the conductor to allow the disassembly of the rotor and the seal assembly.

8.1.3.3 Type of impeller will be selected for the application and can be open, semi-open or completely closed.

The need for a lateral analysis of the rotor is determined as describe in 8.2.4.1.
Velocidades críticas laterales pueden ser de preocupación OH6 bombas tipo. Normally, pumps of this type are thoroughly investigated during the development, and the typical rotor dynamics are available and applicable. A lateral analysis must specify for new pumps, or unique critical ones.

8.1.3.5 A SINGLE PIECE HYDRODYNAMIC RADIAL BEARINGS CAN BE USED.

8.1.3.6 Temperature and pressure gauges mounted directly on the
The gearbox will be in accordance with the ISO 10438 standard, except that the the diameter of the gauges will be 50mm (2.0 in). If specified, separable Solid threaded bushings are supplied for temperature gauges.

8.1.3.7 The inductors, drivers, and main rotating components similar ones must be dynamically balanced according to ISO 1940 -1 grade G2.5, or up to a residual imbalance of 7g x mm (0.01 oz-in), whichever is greater. mayor. If possible, the weight of the gazebo used for balancing is not will exceed the weight of the component being balanced. The resulting vibration The measurement during the test will not exceed the levels in Table 7.

8.2 Pump bearings (types BB1 through BB5)

8.2.1 pressure enclosures

8.2.1.1 Split axial covers may have a leaf gasket
composition or a union of metal to metal, the supplier's offer must indicate what is being offered.

8.2.1.2 Pumps for service temperatures below 150 °C (300 °F)
puede ser montado en el pie.

8.2.1.3 In pumps with split axial casings, hooks or holes Ropes for the eye bolts will be provided to lift only the upper half. from the casing and it is labeled. The methods to lift the machine mounted will be specified by the seller (see 9.2.2.1.a and annex L).

If specified, proposed connection designs will be submitted to the buyer for their approval before manufacturing. The drawing must show welding designs, size, materials, pre-welding and treatments post-welding thermal.

8.2.2 ROTOR

8.2.2.1 The impellers of the multistage pumps are located individually along the axis by a shoulder or captive split ring in the normal hydraulic thrust direction.

8.2.2.2 Rotors with adjustable dispatch impellers will have means mechanical devices to limit the movement of the impeller in the opposite direction to the normal hydraulic push 0.75mm (0.030 inches) or less.

8.2.2.3 If specified, rotors with contraction impellers must to have mechanical means to limit movement in the direction opposite to the normal hydraulic push 0.75mm (0.030 inches) or less.

8.2.2.4 The deviation of the mounted shafts and rotors measured with the shaft or rotor Supported on V-blocks or rollers adjacent to their bearings must be within the limits indicated in table 15.

8.2.3 THE SERVICE SPACES

8.2.3.1 bushings of the box Renewable and sleeves between stages or the equivalent they will be provided at all points between stages.

8.2.3.2 operating clearances associated with the components used to balance the axial thrust or to serve as lubricated bearings Product internals can be manufacturer standard, provided that these spaces are established as exceptions to this international standard (see 5.7.4) in the proposal and was approved by the buyer. If tolerances manufacturer standards are based on combinations of materials that they exhibit superior wear characteristics, supporting data must be included in the proposal.

Table 15 - Axis and requirements for rotor misalignment

Flexibility factor, Ff[a, b] $mm^2(in^2)$	1,9109 (3,0106)		1.9<109 (3.0<106)	
Admissible of the axis decentered, TIR<m (in)	40 (0.001 5)		25 (0.001 0)	
Adjustment of components in the axis	Spaces free.	interference	Spaces free.	interference
Decentering allowed rotor radial, <m (in) TIR[c]	90 (0.003 5)	60 (0.0025)	75 (0.003 0)	50 (0.002 0)

a) $Ff = L^4/D^2$
where L is equal to the bearing duration and D is equal to the diameter of the shaft (larger) in the impeller.
b) The flexibility factor of the shaft, $F_f$is directly related to the static deflection of
a simply supported beam, and therefore it is a good
indicator of the achievable decentralization during manufacturing and the quality of balance that can be achieved and maintained.
c) Exhaustion of the driving centers, balance drum, and sleeves.

8.2.4 DYNAMICS

8.2.4.1 Lateral Analysis

8.2.4.1.1 Depending on the pump design, the first or second speed
wet lateral critique of various stages and high-speed pumps can match the operating speed, particularly as clearances internals increase with wear. A lateral analysis can predict if it is likely that this coincidence and if the resulting vibration will be acceptable.

8.2.4.1.2 Unless otherwise specified, the need for an analysis
the side of the rotor of a pump will be determined according to the established process in Table 16. For this process, the following definitions are applied.

a) of the identical pump: same size, hydraulic design, the number of etapas, r/min, espacios libres, tipo de sello del eje (cara axial o casquillo breakdown), type of bearings, the weight of coupling, cantilever of hook, and the pumping of the same liquid.

b) Similar pumps: by agreement between the buyer and the manufacturer, having take into account the factors listed in the previous definition (item a).

c) Classically rigid: the first critical dry speed is above continues from the maximum speed of the pump by the following text:

20% for rotors designed for wet operation only.

30% for the rotors designed to operate in dry conditions.

Table 16 - Decision logic for lateral rotor analysis

Step	Action
1	design pump
2	Are there similar or identical bombs? If "yes", go to step 5. If "no" go to step 3.
3	Is it a classic rigid rotor? If 'yes', go to step 5.

	If 'no' go to step 4.
4	Required analysis
5	The analysis is not recommended

8.2.4.1.3 If a lateral analysis is required by the process in 8.2.4.1.2, or from if specified by the buyer, it must be carried out and its results evaluated in accordance with Annex I.

8.2.4.2 ROTOR BALANCING

8.2.4.2.1 The rotors of the categories listed below will be two dynamically balanced low-speed plans for qualification balance in Table 17:

Multi-stage pumps (three or more stages);
One and two-stage bombs whose maximum continuous speed is greater at 3,800 rpm.

The rotor assembly sequence and balance correction will be adjusted to the ISO standard 11342. For balance, the rotor does not include the middle shaft. coupling of the pump or the rotating units of the mechanical seals.

Table 17 shows ISO 1940-1 grade G2.5 for all adjustable rotors of interference at a speed of 3,800 r/min. This is based on two factors:

At 3,800 rpm, the upper limit of balance grade G2.5 produces a force due to the 10% weight imbalance of the rotor, which means that the imbalance will have no material effect on the way of operation of the rotor;
For rotors with high flexibility (see Table 15), it is not practical to achieve and maintain the straightness of the rotor necessary for G1 grade balance.

The mass eccentricity associated with G1 degree of equilibrium is very small, for example 2.5 mm (0.00010 inches) maximum for the operation at 3,800 r/min. This has two consequences:

that it is not practical to balance the components better than G2.5 (see 5.9.4.1), because the tree actually changes when it is mounted. component;
The quality of balancing may not be verifiable if the rotor is disturbed from its position in the equilibrium stand or disassembled and reassembled mount. Normally it is possible, however, to carry out a residual unbalance verification to check the accuracy of the equilibrium position.

Table 17 - Rotor balance requirements

Adjustments of components of the axis	Play	Interference	
Continues from la<<3 800[a]		3 800	3 800

maximum speed (r / min			
Flexibility factor, Unlimited L^4/D^2, $mm^2(in^2)$		Without limits	1,9109 (3,0< <10^6)[c]
Degree of balance of the rotor	b	G2.5 (8W/n)[d]	G1 (4W/n)[d]
NOTE Refer to Table 15 for rotor and shaft misalignment requirements. a) To allow for a 5% increase in speed. b) the balance correction during assembly is not feasible due to slack adjustment not maintain the corrected balance. c) If more flexible disks are used at speeds above 3,800 r/min, for achieving and maintaining this level of balance requires special attention to design, manufacturing and maintenance. approximately equal to the midpoint of the corresponding equilibrium quality degree the ISO.			

8.2.4.2.2 For the balancing of the rotor, the individual vacant slots are They will fill with half crown keys.

8.2.4.2.3 If the rotor is balanced as a whole, a test of residual imbalance will be formed. The control is carried out after final rotor balance, following the procedure outlined in Annex J. The weight of all media keys used during the final balancing of the mounted rotor will be recorded in the residual imbalance sheet.

8.2.5 BEARINGS AND BUSHINGS

8.2.5.1 If supplied, hydrodynamic radial bearings will be made of compliance with 8.2.5.1.1 through 8.2.5.1.4.

8.2.5.1.1 The bearings must be split to facilitate assembly, precision it took and the type of sleeve or a cushion, with a steel back, coverings replaceable, pads, or shells. The bearings must be equipped with anti-rotation pins and will be fixed positively in the axial direction.

8.2.5.1.2 The coverings, cushions, or deposits should be in housing. with axial division and can be replaced without having to disassemble any part of the casing or remove the coupling cube.

The bearings must be designed to prevent reverse installation. either face down, or both.

8.2.5.1.4If the tree contains more than 1.0% chromium and the surface speed the magazine is about 20 m/s (65 ft/s), the axis magazine will be chrome-plated, hard coating, or with the carbon steel sleeve.

This construction is necessary to prevent damage to the bearing. wool wire

Hydrodynamic thrust bearings will be made in accordance with 8.2.5.2.1 through 8.2.5.2.5.

8.2.5.2.1 The thrust bearings must be of the multiple segment type antifriction (babbitted) steel backing, designed for the promotion of equal thrust in both directions and arranged for lubrication to continuous pressure on each side. Both parts must be of the segment type oscillating, which incorporates a self-leveling function that ensures that each the pad carries an equal part of the thrust load with less variation of thickness of the pads.

8.2.5.2.2 Push collars can be positively locked on the axis
to avoid friction.

The two faces of pressure rings must have a roughness of the
surface no more than 0.4mm (16 micro inches) Ra, and, after the assembly, the total indicated axial misalignment of both sides will not be greater than 13mm (0005 in).

8.2.5.2.4 The thrust bearings must be sized for the load
maximum applied load (see 5.10.1.2). To this load and the speed of the corresponding rotation, the following parameters must be met.

a) minimum oil film thickness of 8mm (3 in 0000)

b) maximum unit pressure (load divided by area) of 3,500 kPa (35 bar) (500 psi), y

c) maximum calculated temperature of the antifriction metal surface 130 ° C (265 ° F).

If specified, the thrust bearing size must be reviewed and approved.
by the buyer.

The limits indicated above correspond to a design factor of 2 or more about the basis of the maximum bearing capacity. The temperature of the calculated anti-friction metal surface is a design value and is not representative of the actual friction temperatures under these conditions. Bearings sized to meet the above criteria have the
next permitted metal temperatures in the workshop test and in the field (see 5.10.2.4):

Store test on water and normal operation in the field (7.3.3.4.b): 93 °C (200°F);
Field or travel alarm: 115 °C (240 °F).

8.2.5.2.5 The thrust bearings are arranged to allow positioning
axial of each one in relation to the rotor housing and the adjustment of play or bearing preload.

8.2.5.3 If the input oil temperature exceeds 50 °C (120 °F), it will
will especially take into account that it carries the design, the flow of oil and

increase in the permitted temperature. Points of sale for oil of the Thrust bearings will be those recommended by the bearing manufacturer. for the neck speed and lubrication method involved. Connections Oil in bearing boxes must comply with 6.5.

8.2.5.4 Axially split bearing boxes will have a separation joint. from metal to metal whose halves are joined by means of pins cylindrical.

8.2.6 LUBRICATION

 8.2.6.1 If specified or recommended by the manufacturer and approved by the buyer, a lubrication pressure system will be provided for supply oil at an appropriate pressure for the pump bearings, the conductor, and any other powered equipment, including gears. Figure B.10 Table B.1 shows the details of the minimum acceptable system.

8.2.6.2 The external lubrication pressure systems must comply with the requirements of ISO 10438 -3 and Annex B, Figure B.10 and Table B.1.

8.2.6.3 The oil drainage pipes must have a slope of 1 in 50 [20mm / m (0.25 inches / feet)].

8.2.6.4 When oil is supplied from a common system to two or more equipment (such as a pump, a gear, and a motor), the characteristics The oil must be suitable for all supplied equipment. The The salesperson has the responsibility to obtain approval from the unit. buyer and the other equipment suppliers for oil selection.

Typical lubricants used in a common oil system are mineral oils (hydrocarbons) that correspond to ISO grades 32 to 68, as specified in the ISO 3448 standard.

 8.2.6.5 If specified, the lubrication pressure system must comply with the requirements of the standard ISO 10438-2. For a lubrication system such, data sheets must be provided.

8.2.7 TESTS

8.2.7.1For the bearings lubricated under pressure, test bench oil and components of the oil system downstream of the filters must meet the cleaning requirements specified in standard ISO 10438-3.

8.2.7.2 During the test, the bomb shop with lubricated bearings at pressure, the oil flow for each bearing housing is measured and register.

8.2.7.3 All purchased probes, vibration transducers, and the oscillator-
The modulators must be in use during the test. If the probes of vibration not provided by the supplier or if the purchased probes they are not compatible with reading installations, probe store and readings that meet the accuracy requirements of API 670 will be used. The vibration measured with this instrumentation is the basis for acceptance or rejection of the pump (see 5.9.3.6).

8.2.7.4 With the buyer's approval, double suction pumps of a stage that can be mounted for the driving test from the end opposite of the pump, in comparison with the general regime for the pump of the contract and the driver. No rehearsal is required after the final setup. If this arrangement is required, it will be indicated in the proposal.

Note: This is sometimes necessary to accommodate the supporting evidence. limitations of pipes.

 8.2.7.5 If specified, the hydrodynamic bearings will be removed, inspected by the buyer or their representative, and reassembled once performance test completed.

8.2.8 PREPARATION FOR SHIPMENT

8.2.8.1If a spare rotor or component is purchased, it will be prepared for the climate-controlled storage for 3 years. Preparation for the storage must include treatment with an antioxidant and the enclosure in a vapor barrier envelope with a vapor phase release inhibitor belt. The rotor or element will be in a box for the specified type of shipment. An the rotor will have an elastic material (but not conductive, TFE or PTFE), at least 3mm (0.12 inches) thick, between the rotor and its support base, the support it will not be in rotor magazines. One element will have its rotor secured for prevent movement within the stator.

 If specified, replacement rotors and cartridge-type elements
It will be prepared for vertical storage. A rotor is supported from its coupling end with an accessory designed to withstand 1.5 times the weight of the rotor without damaging the shaft. A cartridge-type element is supported by the cover of the casing (with the rotor hanging from its thrust bearing).

 8.2.8.3 If specified, a transport container will be provided. storage designed to store the rotor or the cartridge vertically.
 8.2.8.4 If specified, the transport and storage containers it must be designed to allow for the inert gas inhibition during the storage.

8.3 VERTICAL SUSPENSION PUMPS (TYPES VS1 THROUGH VS7)
8.3.1 GENERALITIES

The specified discharge pressures will be at the discharge connection. Buyer. The hydraulic performance will be corrected by static column and the

friction loss. Performance curves casing Bowl or the
The pump will be supplied with the indicated correction.
8.3.1.2 Bearing boxes for vertically suspended pumps not
They need to be arranged so that the bearings can be
replaced without disturbing pumping units or mounts.

8.3.2 PRESSURE CASINGS

8.3.2.1 fastening screws and the housing alignment pins are not
they require high or low relief containers for assemblies.

8.3.2.2 The pumps must be equipped with barrel vent connections.
of suction and the sealing chambers.

8.3.3 ROTORS

The requirement for completely enclosed drives (5.6.1) does not apply.
to the vertically suspended bombs.

8.3.3.2 All the axes of the pump can be machined or roughened and
finished in its entirety. The total indicated departure time shall not exceed
40mm / m (0.0005 inches / feet) in length. Total output operation
It should not exceed 80 mm (0.003 in) over the total length of the axis.

8.3.3.3 The pump shaft must be made of a single piece unless it is
approved by the buyer (due to the total length of the axis or restrictions
shipping).

8.3.4 WEAR PARTS AND CLEARANCES OF
Operation

8.3.4.1 Renewable box bushes will be carried out at all stages in between and in
other places of the budge. However, the pressure difference between stages and the
character of the liquid handled (for example, dirty or non-lubricants) must
determine the need for shirts of the corresponding axis.

8.3.4.2 The specified operating clearances in 5.7.4 shall not apply.
to the authorizations of the bushings. The spaces used must be listed in the
proposal and approval by the buyer.

8.3.4.3 Pumps with semi-open impellers in erosive service
They must have a removable casing cover.

8.3.5 DYNAMICS

 If specified, the supplier must provide a dynamic analysis of the
pump and its support structure to confirm the acceptability of the design. The
the buyer and the seller must agree on the scope, the method, and the criteria of
acceptance for this analysis.
Vertically suspended pumps are generally flexible structures.
with the functioning of speeds situated between the natural frequencies.

As such, they are susceptible to resonant vibration if their margins of separation is not verified during the design. The structural elements basics typically include the foundations, structures, and frames of the pump of the motor. Typically, the deflection of the foundation will represent less than 5% of the total deformation of the structural elements. If the data of the foundations are not available when the analysis is being conducted, they a agreed value should be used. In general, a separation margin of 20% of the operating speed range, it must be maintained within the frequency natural to the engine support structure and the operating speed.

8.3.6 BUSHINGS AND BEARINGS

8.3.6.1 bearings must be adequately resistant to corrosion and resistant to the abrasion for the product and the specified temperature. The separation the maximum between the axle bushings must comply with figure 32 in order to to maintain the first critical speed above the maximum speed allowed to continue.

8.3.6.2 The thrust bearings that are integral with the conductor must meet the requirements of 6.1.6. The thrust bearings and solid boxes with the pump, they must meet the applicable requirements of 5.10.1. To allow the axial adjustment of the rotor and the oil lubrication, the thrust bearing is fits with interference fit in a sliding fit, key sleeve driven.

8.3.6.3 Except for VS4 type sump pumps, the first impeller the stage is located between the bearings.

NOTA Although the inter-bushing first stage thrust can result in upper rotor support, some applications, such as for drains, require the compliance with upper suction and can benefit from a first stage of cantilever driving arrangement.

8.3.7 LUBRICATION:

Vertical pump bearings normally lubricated by the pumped liquid. Alternative lubrication methods will be proposed if the liquid bombed is not suitable.

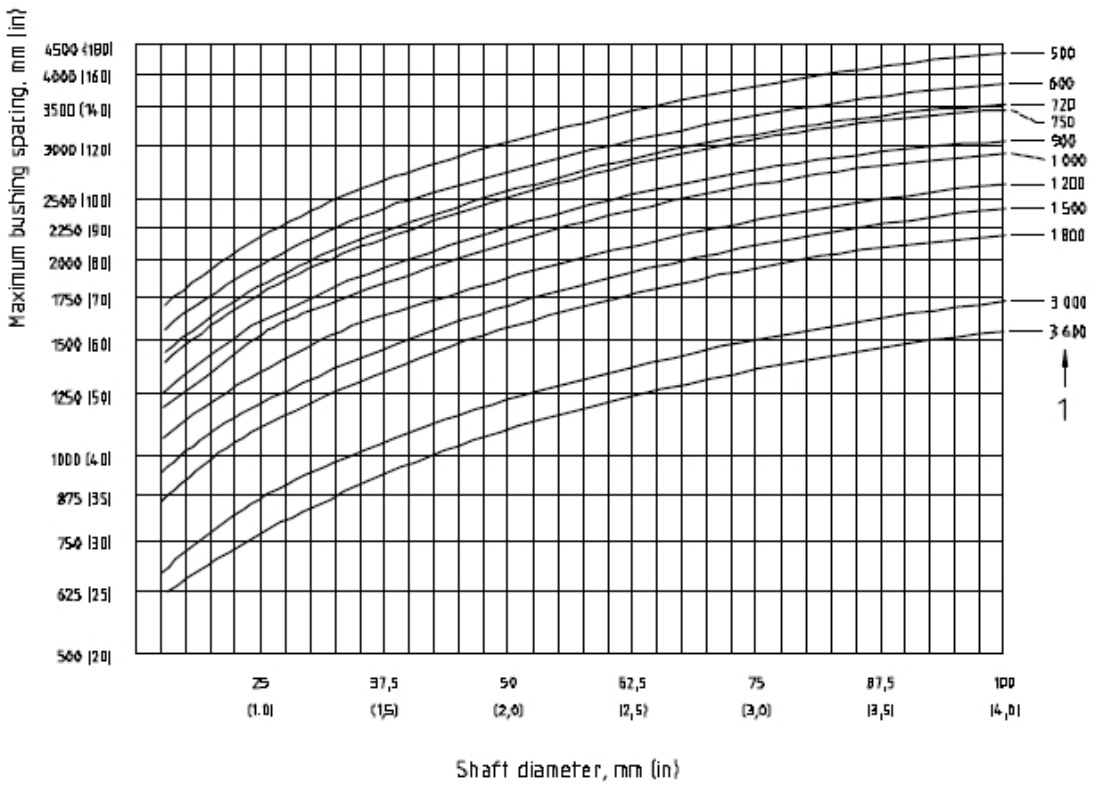

Key:

1. The curves for different rotation speeds (r/m)

Figure 32 - Maximum separation between guide bushings of the shaft

8.3.8 ACCESSORIES

8.3.8.1 Conductors

Pumps and engine mounts that could be damaged by reverse rotation they must be equipped with a non-reversing ratchet or another device of approved buyer to prevent reverse rotation.

8.3.8.2 COUPLINGS AND PROTECTORS

8.3.8.2.1 coupling faces must be perpendicular to the axis of the coupling of 0.1mm/mm (0.0001 in/in) face or total diameter of 13mm (0.0005 in) indicated to run out, whatever is greater.

8.3.8.2.2 Vertical pumps without integral thrust bearings require rigid adjustable couplings.

8.3.8.2.3 In vertical pumps equipped with rigid couplings and mechanical seals, the coupling will be a type of separator. The separator it must be long enough to allow for the replacement of the set of Seal, including the sleeve, without the need to remove the conductor.

8.3.8.3 MOUNTING PLATES

□ 8.3.8.3.1 If specified, the mounting plate for double casing pumps it must be separated from the main body flange and positioned there sufficiently below it to allow the use of through bolts in the body strap (see Figure 33).

NOTE This translates to an integrity of the superior union and should be considered for critical and cryogenic services.

A minimum of four alignment positioning screws are required. will provide for each component of the transmission train that has a more than 250kg (500 lb) to facilitate horizontal adjustment.

□ If specified, pumps will be provided with a unique plate separated for screwing and grouting to the foundation (see Figure 33). This plate it must be machined on its upper surface for the mounting of the head of download, can, or engine support.

8.3.8.4 PIPES AND THEIR ACCESSORIES

If the mechanical seals and conductors are not installed before shipping, The seal pipe system will not be fully assembled.

8.3.9 TESTS

8.3.9.1 The pumps must be tested as complete units. They should not be They recommend tests that use only bowls and pushers. In cases where mounted unit tests are practical, the seller must present the alternative testing procedures to the proposal. Cans of suction, if included, is not necessary for performance testing.

 8.3.9.2 If specified, a resonance with the thread pump test was carried out. cable in the structure of the pump/driver frame assembly. This assembly excited by an impact on the conductor frame, and the natural frequency (is) will be determined by the response. This essay will be conducted with an impact on the conductor in the direction of the discharge flange and is repeated at 90° from the flange of discharge. The margin of separation during these tests will be 10% by below the minimum or above the maximum operating speed.

8.3.10 SIMPLE DIFFUSER CASE (VS1) AND VOLUTE PUMPS (VS2)

Roommate components constitute the pressure of the
The box is the box (bowls), column, and discharge head.

8.3.10.2 line axes can be open or closed. Closed line axes for the type of lubrication must be approved by the Buyer.

NOTE: Open axes of the line are lubricated by the pumped liquid. If the Pumped liquid is not suitable as a lubricant, shafts of the attached line, they can be installed to ensure a clean lubricant supply for the line shaft bearings.

The mounting surface of the discharge head is suitable for both for injection and assembly on a single machined plate.

8.3.10.4 push restrictions are required on the pump if a joint of expansion is installed in the discharge nozzle. Review is recommended. of the proposed installation design and the piping by the seller.

 8.3.10.5 If specified, line axes will be provided with sleeves. hardened under each bushing.

8.3.10.6 Unless otherwise specified, integral bush spiders and relief adjustments will be used for all column sizes.

8.3.10.7 Unless specified otherwise, bowls will have flanges. metal for high or low relief attacks of metal.

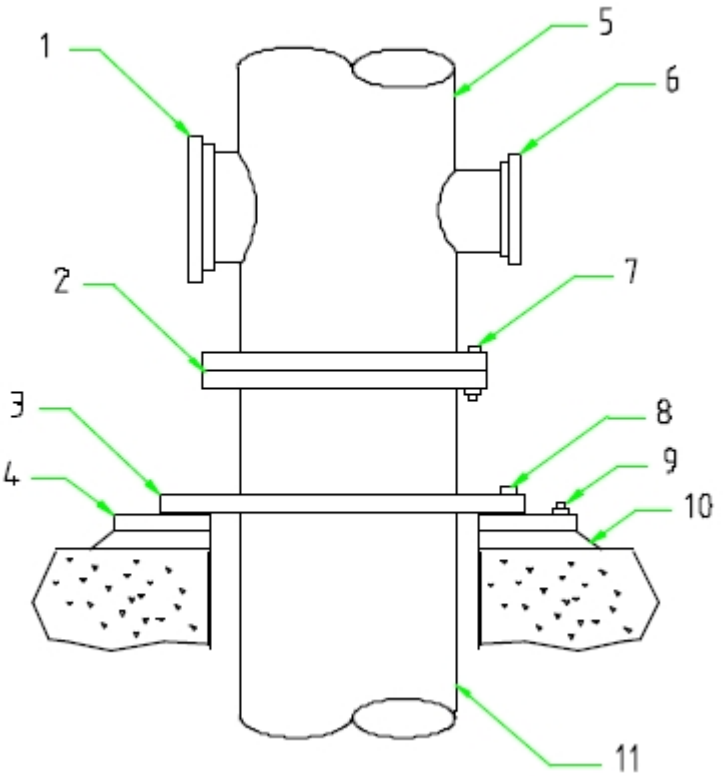

Key

suction bridge

2. Girth of the main body

3. mounting bridge

4. Sole plate

5. bomb head

drainage band

7. Body extension through typical screws

8. The fastening bolts (typical)

9. The anchor bolts (typical)

10. grout

11. Lid (outer cover)

Figure 33 - Typical assemblies for vertically suspended pumps (VS6 y VS7) of the double casing with sole.

8.3.11 SIMPLE CASING AXIAL FLOW PUMPS (VS3)

8.3.11.1 The components that make up the pressure casing are the box (plato), the column and the high head.

8.3.11.2 Unless specified otherwise, integral bush spiders and relief adjustments will be used for all columns of size

8.3.11.3 Bowls will have metal for high or low relief metal attacks.

8.3.12 Single line shaft casing (VS4) and cantilever (VS5) Pumps

8.3.12.1 For VS4 pumps, bushings are provided to support the impeller and the axis.

8.3.12.2VS5 bombs must comply with 8.3.12.2.a) through 8.3.12.2.d):

a) The rotor is cantilevered from its bearing assembly. Lower bushings Submerged are not used to guide the axis.

b) The rigidity of the axle will limit total deviation, without the use of a box hub. in such a way that the impeller does not come into contact with the pump casing under the most severe dynamic conditions on the complete flow curve from the head with a maximum diameter impeller and at maximum speed and fluid density.

c) The cantilever type pumps will have their first critical dry speed, due to its rotors, 30% above the maximum allowed speed continues.

d) For the cantilever type VS5 pumps, the total indicated shaft deviation does not. it will be greater than 50mm (0.002 in), measured on the axis directly above the mechanical seal or packing.

8.3.12.3 For the open system sump pump service, components that contain pressure of type VS4 and Type VS5 The pumps are the casing, suction cover and the discharge pipe. For the closed system to pressure or service of the vacuum tank, the sealing chamber, the plate of cover of the pump and the cover tank also become components that contain pressure.

For VS4 pumps, the thrust bearing must be designed with grease. or lubrication by oil mist. Bushings can be lubricated with water, grease, products or self-lubricating. VS5 bearings of the pump type can be lubricated with grease. The temperature of the stabilized bearing housing does not it will be above 82 °C (180 °F) when operating at an ambient temperature of 43°C (110°F). Recommended fats should be suitable for the operation at these temperatures.

Mechanical seals are not usually supplied in VS4 and VS5. pumps, except if necessary for closing the system service.

8.3.12.6 Hooks must be provided on the cover plate for raise the pump assembly, including the driver.

The discharge nozzle and cover will be designed as required. in 5.3.3.

If the pump is mounted on a container, the pump mounting nozzle The container must also be designed to withstand the permitted loads. from nozzle. See 5.5 for allowable nozzle loads. 8.3.12.8 For fluids flammable or hazardous, the lid joints will be tightly sealed with vapor. The design and The cover plate mounting was agreed upon by the buyer and the seller.

8.3.12.9 The mechanical seals, if supplied, are located on the plate of the cover to seal the steam in the supply tank or container. The Mechanical seals normally steam seal, however, they should be designed to operate in the liquid in the case of the tank or filling container excessive. The seal chamber will have arrangements for a high exit dot.

8.3.12.10 Pump blades can be used instead of the rings. wear to reduce leaks back into the crankcase.

8.3.12.11Normally spacer couplings are not used in VS4 and VS5 type. Coupling cubes are supplied with a sliding fit on the shaft. The coupling cubes and the keys will be secured to the shaft with screws. Fixation to facilitate the final adjustment coupling.

8.3.13 DOUBLE SHELL DIFFUSER (VS6) AND THE VOLUTE (VS7) BOMBS

8.3.13.1 The components that constitute the pressure of the VS6 box pumps like the discharge head and suction can be. components that make up the pressure of the VS7 type box pumps are the outer casing (with the discharge nozzle), the head plate, and the tube of suction.

 If specified, bowls and column pipes must be hydrostatically tested with the liquid at a minimum of 1.5 times the pressure maximum differential developed by the set of bowls. The tests Hydrostatics will be carried out in accordance with the requirements of 7.3.2.

The complete case of exterior ventilation will be carried out through a ventilation connection highest point.

Measures will be taken to ensure complete ventilation of the inner set within the auxiliary chamber joint or process pipelines partner.

8.3.13.5 If specified, suction can be supplied with a drain. pipes to the surface.

8.3.13.6 Column sections must incorporate integral spider bushings. bas-relief and adapts to all column sizes.

9. SELLER INFORMATION

9.1 Generalities

9.1.1 The information provided by the supplier is specified in 9.2 and 9.3.

The data will be identified on transmission letters (cover), pages of title and in the labeling boxes or another prominent position in the drawings, with the following information:

a) name of the company / of the buyer's owner.

b) The work/project number.

c) The item number of the equipment and the name of the service.

d) The investigation or buyer, order number.

e) Any other identification specified in the inquiry or order purchase.

the identification number of the supplier of the proposal, the number of manufacturing order, serial number or other reference needed for the full identification correspondence return.

9.1.3 If specified, a coordination meeting was held, preferably. at the supplier's plant, within 4 to 6 weeks after the order commitment. Unless otherwise specified, the supplier you must prepare and distribute an agenda before the meeting, which at a minimum it must include a review of the following articles:

a) The purchase order, the scope of the offer, the responsibility unit and subvendor items.

b) The data sheets.

c) the applicable specifications and previously agreed exceptions.

d) The schedules for data transmission, production, and testing.

e) The quality assurance and procedures program.

f) Inspection, streamline and tests.

g) Schemes and material lists for auxiliary systems.

h) The physical orientation of the equipment, pipes, and auxiliary systems.

i) Coupling of selection and classification.

j) push and bearing size, estimate loads and configurations specific.

k) dynamic analysis of the rotor (lateral torsion, torsional and transients, according to It is necessary; normally it is not available for 10 to 12 weeks.

the performance of the equipment, the operating conditions alternatives, startup, shutdown, and any usage limitations.

Scope and details of any pulse or vibration analysis.

Instrumentation and controls.

Identification of elements for tension analysis or other reviews of design.

p) Other technical articles.

9.2 PROPOSALS

9.2.1 General Information

9.2.1.1 The supplier must submit the original proposal and the number of copies. specified to the addressee specified in the information documents. At a minimum, the proposal must include the data specified in 9.2.2 to through 9.2.5, as well as a specific statement that the system and all its components are in strict compliance with this Standard International. If the system and its components are not strictly of agreement, the seller must include a list that details and explains each deviation. The supplier must provide information so that the buyer can evaluate the proposed alternative designs. All the correspondence must be clearly identified in accordance with 9.1.2

9.2.1.2 Spaces less than those required by Table 5 were declared as a exception to this rule in the proposal.

9.2.2 DRAWINGS

The drawings indicate in the supplier drawing and required data (VDDR) Form (see example in Annex I) will be included in the proposal. As at a minimum, the following data must be provided:

a) A general provision or the layout design for each platform or greater system, which shows the direction of rotation, size, and location of the main buyer connections; dimensions, dimensions of maintenance-free space; general weights; erection weights; weights maintenance maxima (as indicated for each part) points of elevation and methods of raising the mounted machine, and if applicable the standard motherboard number (see appendix D).

b) the cross-sectional plans that show the details of the equipment proposed.

c) Diagrams of all auxiliary systems, including the seal cleaning. of lubricating oil, control, and electrical systems. Lists of materials will be included.

9.2.2.2 If typical drawings, diagrams, and material lists are used, which it will be marked to show the correct weight and dimension data and to reflect the actual team and the proposed scope.

9.2.3 TECHNICAL DATA

The following data will be included in the proposal:

a) the buyer's data sheets, with the supplier's information they fully entered into this and the literature to completely describe the details of the offer.

b) The expected noise data (5.1.16).

c) The drawing of data providers and shape requirements (see example in Annex I), which indicates the schedule according to which the supplier commits to transmitting all the data specified within the framework of the purchase order.

d) A schedule for the shipping of the equipment, in the weeks following the reception of the order.

e) A list of the main components they carry, showing the interchangeability with other elements in the project or the holder of existing machines.

f) A list of the recommended spare parts for maintenance start and normal (see table 18).

g) A list of the special tools supplied for the purposes of maintenance (see 6.6.1).

h) A description of any special time protection and winterization necessary for startup, operation, and periods of the idleness, under the conditions of the place specified in the sheets of data. This description must clearly indicate the protection that must be to be accredited by the buyer, as well as that included in the scope of provider of the offer.

i) A complete tabulation of the utility requirements, for example, steam, water, light, air, gas, lubricant oil (including the quantity and pressure of supply of the required oil, and the heat load to be eliminated by the oil), and the plate power of characteristics and power requirements of auxiliary drag operation. Approximate data will be clearly identified as such.

j) A description of the optional or additional tests and the inspection procedures of the materials as required by 7.3.4 or 7.2.2.1.

k) A description of any special requirement if specified in the buyer inquiry or as indicated in clause 5.1.11, 5.1.12, 5.1.13, 5.2.12.2, 5.3.4, 5.9.3.1, 5.10.2.4, 6.1.3, 6.1.6, 6.2.13, 8.2.1.1, 8.2.3.2, 8.2. 7.4, 8.3.4.2, 8.3.9.1, 9.2.1.2, 9.2.2.1, 9.3.4.2, 9.3.5.1 and 9.3.9.1.

 L) If specified, a list of similar equipment installed and operating in similar conditions.

m) Any start-up, shutdown, or restrictions on operations necessary to protect the integrity of the equipment.

n) The specific suction velocity calculated

Any limitation of laboratories that the supplier may require assemble and operate single stage, double suction pumps from the opposite extreme of the tests (see 8.2.7.4).

A list of the components that can be interpreted as of alternative design, so they require the buyer's acceptance (4.2).

Table 18 - recommended spare parts

Parts	Number of identical bombs (N)						
	1-3	4-6	greater than or equal to 7	1-3	4-6	7-9	is greater than or equal to 10
	Number of recommended spare parts						
	Start			Normal maintenance			
Cartridge b[e]				1	1	1	1
Element[b, f]				1	1	1	1
Rotor c[g]				1	1	1	1
Box[a]							1
Head (Cover of the box and from the camera of seal/press pads							1
Bearing support to							1
Axis (with key)				1	1	2	N/3
Driver				1	1	2	N/3
Use Rings (game)[h]	1	1	1	1	1	2	N/3
Complete bearings (rolling element, radial)[a, i]	1	1	2	1	2	N/3	N/3
Complete bearings (rolling element, thrust)[a, i]	1	1	2	1	2	N/3	N/3
Complete bearings (hydrodynamics, radial)[a,i]	1	1	2	1	2	N/3	N/3
Only cushion of bearing (hydrodynamics, radial[a, l]	1	1	2	1	2	N/3	N/3
Complete bearing (hydrodynamics, thrust)[a,i]	1	1	2	1	2	N/3	N/3
Only cushion of the bearing (hydrodynamics, thrust)[a,i]	1	1	2	1	2	N/3	N/3
Mechanical closure/packaging[d,h,i]	1	2	N/3	1	2	N/3	N/3
Axis manga[h]	1	2	N/3	1	2	N/3	N/3
Gaskets, Washers, O-Rings (Set)[h]	1	2	N/3	1	2	N/3	N/3

Table 18 - recommended parts (continuation)

parts	Number of identical bombs (N)						
	1-3	4-6	7 +	1-3	4-6	7-9	10 +
	Recommended number of spare parts						
	Start			normal maintenance			
Add to Vertical Pump:							
Bowls						N/3	
Spiders or spider bushes (Set)			1	1	1	N/3	N/3
Bearings, bushings (Set)	1	1	2	1	1	N/3	N/3
Add for comprehensive team of high speed							
Gearbox		1	1	1	1	1	N/3
Diffuser and lid	1	1	1	1	1	1	N/3
ribbed shaft	1	1	1	1	1	1	N/3
Gearbox of the accommodation				1	1	1	N/3
Oil pump, Internal		1	1	1	1	1	N/3
Oil pump, External		1	1	1	1	1	N/3
Oil filter	1	2	N/3	1	2	3	N/3

a – Only Horizontal Pumps
b- Critical service pumps are generally unspared, partially avoided, or multi-stage. When a critical machine is low, loss of production or violation of environmental results permits.
Essential service pumps are necessary for operation and they have installed a spare one. A loss of production only It occurs if the main and spare fail at the same time.
d- Cartridge type mechanical seals include the sleeve and the gland.
The cartridge consists of assembled elements plus discharge head, seal(s), and support housing(s).
The f-Element consists of a mounted rotor plus stationary hydraulic parts (diffuser(s) or volute(s)).
The g-rotor consists of all the rotating parts connected to the shaft, except for the coupling means.
h-normal wear on parts (see point 5.1.1).
i-Per pump set.

9.2.4 CURVES
The supplier must provide the complete performance curves, including differential load, efficiency, the NPSHR water, and power is expressed as a function of of the flow. Except for low specific speed designs where it is not feasible, the curves will extend by at least 120% of the maximum flow efficiency, and the nominal operating point will be indicated. The head curve for the maximum and minimum diameters of the impeller must be included. The number of identification, the specific speed of the impeller and the specific speed of suction is shown in the curves. In your case, the curves will indicate corrections viscosity. The minimum flow (both thermal and stable) will be indicated, regions of preferred and permissible operation, and any limitation of the operation.

9.2.5 OPTIONS
 If specified, the supplier must provide a summary of the procedures that will be used for each of the special tests optional items specified by the buyer or proposed by the seller.

9.3 CONTRACT DATA
9.3.1 GENERAL

9.3.1.1 Contract data will be provided by the supplier in accordance with the agreed VDDR form (see example in annex L).

9.3.1.2 Every drawing must have a title block in the bottom right corner. with the date of certification, the identification data specified in 9.1.2, the revision number and date and title. Similar information should be provided in all other documents.

9.3.1.3 The buyer and the seller must agree on the schedule and the scope of drawing and data review. Buyer review not constitutes authorization to deviate from the requirements of the order unless specifically agreed upon in writing.

9.3.1.4 A complete list of the supplier's data will be included with the first editing of the large drawings. This list should contain titles, numbers of drawing, as well as a calendar for the transmission of all the data that the provider will provide (see example in annex L).

9.3.2 DRAWINGS AND TECHNICAL DATA

9.3.2.1 The drawings and data provided by the supplier must contain sufficient information so that together with the manuals specified in 9.3.5, the buyer can install, operate and maintain the equipment contemplated in the order of purchase. All contract drawings and data must be clearly legible (minimum 8 points font size, although it was reduced from a drawing of large size), it will cover the scope of the agreed VDDR shape (see example in the anexo L) y cumplirán las descripciones detalladas aplicables.

Drawing Dimension Schemes must indicate the suction tolerance of the pump and the discharge nozzle face and reference axis locations of the the central line of the hole of the anchor bolt of the nearest base plate. The central line of the anchor base plate location of the bolt holes It will indicate the tolerance of a common reference point on the motherboard.

9.3.2.2 curves and certified test data (see example in annex M) are they will present within 15 days after the test and must include the head, the power recalculates the appropriate density, and the efficiency conspired against head. In their case, viscosity corrections will be indicated. The NPSHR curve water will be included, produced from real test data, by a driver thrown by the same pattern. The curved blade must include the maximum diameters and minimum of the supplied impeller design, the identification number of the impeller or impellers, and the serial number of the pump.

9.3.3 THE PROGRESS REPORTS

The supplier must submit reports to the buyer at the intervals specified in the VDDR Form (see example in annex L).

9.3.4 LIST OF SPARE PARTS AND RECOMMENDED

9.3.4.1 The supplier must submit complete parts lists for all the provided equipment and accessories. The lists must include the number of unique manufacturer parts, building materials, and delivery times. The Materials must be identified as specified in 5.12.1. Each part must be fully identified and is shown in the cross-sectional drawings transversal or type of mounting so that the buyer can determine the interchangeability of these parts with other equipment. The pieces that have been modified standard dimensions and/or finishes to meet requirements specific performance is identified solely by the part number for future duplication fines interchangeability and. The purchased items standard will be identified by the name of the original manufacturer and the number of piece.

The supplier must indicate in each of these complete pieces ready. of all those parts that are recommended as the start or spare parts of maintenance, as well as the recommended storage quantities each one. These must include recommendations for spare parts from sub-suppliers that they were not available for inclusion in the supplier's original proposal. The The seller will send the lists to the buyer immediately after receipt. of the reviewed drawings and in time to allow for the order and delivery of the parts before the field startup. The shipping letter is will identify with the data specified in point 9.1.2.

9.3.5 DATA MANUALS

9.3.5.1 General

The supplier must provide sufficient written instructions and all the drawings necessary to allow the buyer to install, operate, and maintain all the equipment covered by the purchase order. This information is compiled in a manual or manuals with a cover that displays the information shown in point 9.1.2, an index page and a complete list of the attached drawings by title and the number drawing. The manual or manuals will be prepared. specifically for the equipment contemplated in the purchase order. Sections specific model preprints can be included, but the manuals of "typical" are acceptable.

9.3.5.2. Installation manual

All the necessary information for the correct installation of the equipment must be compiled in a manual that will be issued no later than at the time of the issuance of final certified plans. For this reason, it can be separated from the operating and maintenance instructions. This manual will contain information about alignment and grouting procedures, normal and the maximum requirements for public services, the centers of the media, provisions and rigging procedures, and all other data of the installation. All the drawings and the data specified in 9.2.2 and 9.2.3 that are relevant for the Correct installation will be included as part of this manual.

9.3.5.3 Operation, maintenance, and technical data manual

A manual that contains operational, maintenance, and technical data, it will be sent at the time of boarding. In addition to covering the operation in all the specific process conditions, this manual must include a section that provides special instructions for operation under conditions specified extreme environments. The manual will also include sketches that they show the location of the center of gravity and the rigging arrangements for allow the removal of the upper half of the covers, rotors and the subsets that have a mass greater than 135 kg (300 lb). At a minimum, the the manual must also include all the data listed in annex L that are not are only related to the installation.

ANNEX A
(INFORMATION)

Specific speed and suction specific speed

Specific speed is calculated for the pump performance at the best point. of efficiency with the maximum diameter impeller. Specific speed is expressed mathematically by the following equation:

$$N_s = N(Q)^{0,5} / (H)^{0,75} \qquad \text{(A.1)}$$

where
$N_s$it is the specific speed, dimensionless;
N is the rotational speed, expressed in revolutions per minute;
What is the total flow of the pump, expressed in cubic meters per second;
H is the head per stage, expressed in meters.

Specific speed obtained using SI units multiplied by a factor of 51.64 is equal to the specific speed in system units.

An alternative definition of specific speed is in use (by eye of the flow mediator instead of total flow). The buyer is warned to understand it. that refers to the time of comparing the data.

The specific suction speed is calculated for the pump's performance in the best efficiency point with the maximum diameter impeller and provides a evaluation of the susceptibility of an internal recirculation pump. It express mathematically by the following equation:

$$S = N\left(Q\right)^{0,5} \Big/ \left(NPSHR\right)^{0,75} \qquad \text{(A.2)}$$

where
S is the specific suction velocity, dimensionless;
N is the rotational speed, expressed in revolutions per minute;
What is the flow per eye of the impeller, expressed in cubic meters per second;
it is equal to the total flow for single suction impellers,
is equal to that of an average total flow for double suction impellers.

NPSHR is the required net positive suction head, expressed in meters.

Specific suction speed derived using SI units multiplied by a
The factor of 51.64 is equal to the specific suction speed in system units.
The N_{SS}The symbol is sometimes used to designate specific suction speed.

ANNEX B
(NORMATIVE)
THE COOLING WATER AND SYSTEM DIAGRAMS
LUBRICATION

This annex contains diagrams for water cooling systems and lubrication. The notes and keys of the symbols in figure B.2 through the figure B.10 is shown in Figure B.1. These plans represent the usage systems. common. Other variations and systems are available and must be specified by the buyer and mutually agreed upon by the buyer and the seller.

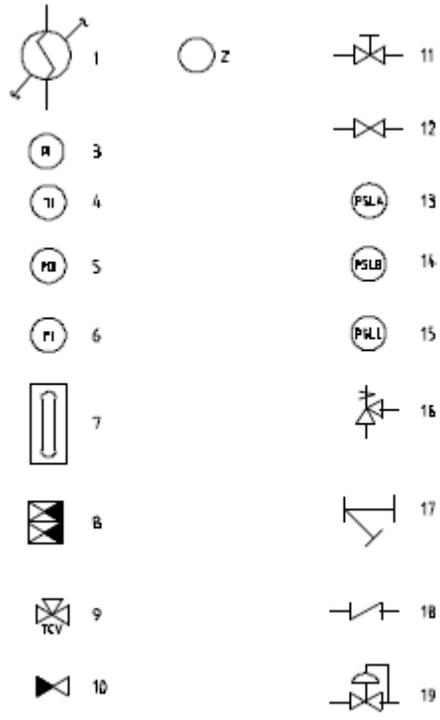

key
1. The heat exchanger
2. Instruments (letters indicate the function)
3. Pressure indicator
4. Temperature indicator
5. Differential pressure indicator
6. The flow indicator
7. Reflex type level indicator
8. Manual 3-way valve (or individual transfer valve)
9. Temperature control valve
10. Block and purge valve
11. Flow regulating valve
12. Block the valve (gate valve)
13. Low pressure switch (auxiliary pump start)
14. Low pressure switch (alarm)
15. Low pressure switch (outgoing)
16. safety valve
17. online filter
18. The check valve
19. Pressure regulating valve

Figure B.1 - Symbols

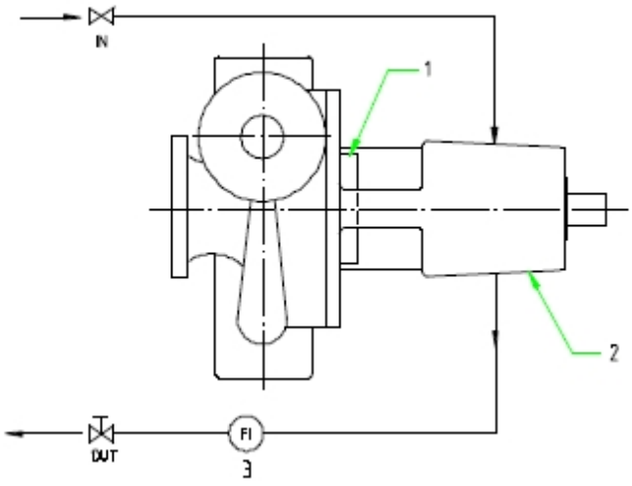

Key:
gland
bearing box
3. The flow indicator

Figure B.2 - Cantilever Pipe Pumps - Plan A, the cooling of bearing housing

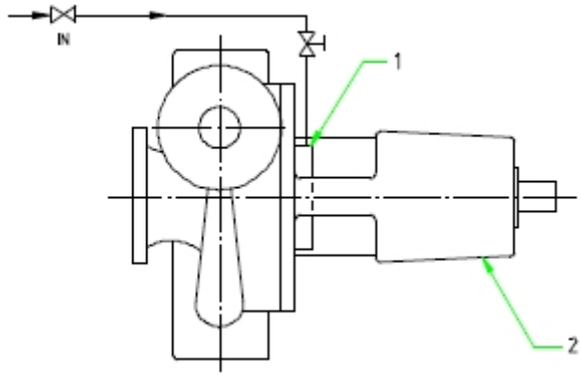

clave:
gland
bearing box

Figure B.3 - Cantilever Pipe Pumps - Plan D, gland cooling

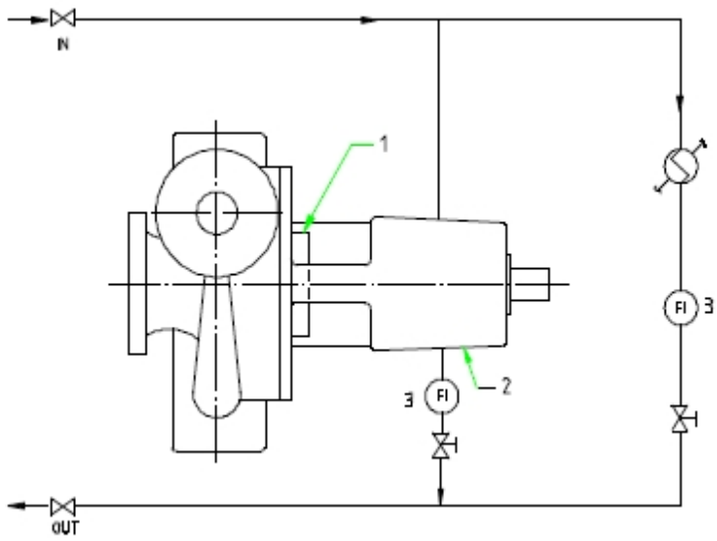

clave:
gland
2. bearing box
3. The flow indicator

Figure B.4 - Cantilever pump piping - K plan, cooling to bearing housing with parallel flow to seal heat exchanger

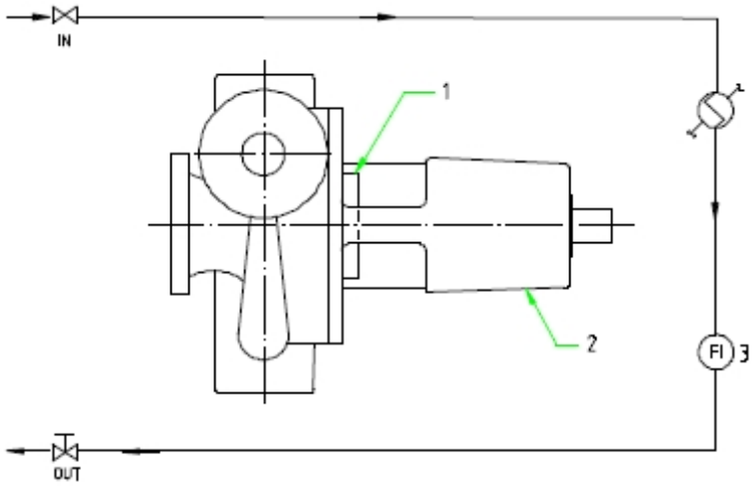

key:
gland
bearing box
3. The flow indicator - optional

Figure B.5 - Cantilever Pipe Pumps - M Plan, cooling to seal heat exchanger

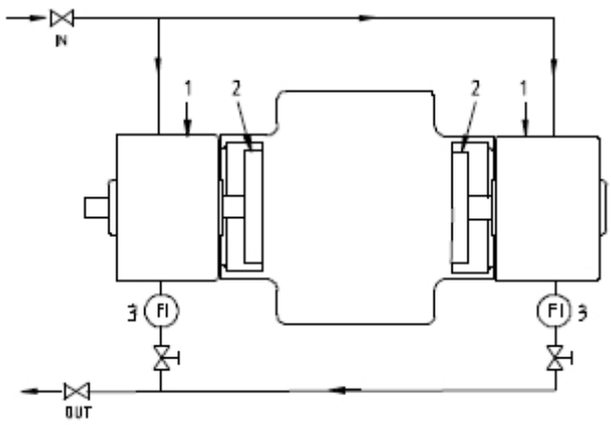

key:
bearing box
gland
3. The flow indicator

Figure B.6 - Piping for pumps among those that accrue - Plan A, cool up to bearing boxes

7 H U P V Q ' G H I L Q L W L R Q V
) R U W K S H K U S R V W K G R F X P W Q W R O O R Z H L Q P Q G H I L Q L W L R Q V

$ [L D G O Y L G H G
' L Y L Z L H W K S H D U D G O L O J H H W W K F H Q W U L R Q W K H [L V

% D U S X H P S
+ R U L] R G Q R V X E F O W L S Q X J P S

% D U U O H U G
) O X L D G W S U H V V K X L J H K W W K D W Q K V H D O S L Q R F H S V V H V X U H
L Q W U R G X H F W H Z G H X Q D S U H V V X U G R H X E P H F K D Q L F H D O R V L V R O D W L R Q
F R P S O W K S H L O R F H L V T S X L S U R W K H Q Y L U R Q P H Q W

% H V W L F L 3 E Q E Q % / 3
) O R Z D W W K L H K X P S F K L H L Y W W [L P X H F I L F L H Q F \

O L T X H G O D Q W
) O X L D G W S U H V O X R Z H W K D W Q K V H D O S L Q R J F S V V V X U H
X V H V D O X E U R F E X Q W K E R H Q W Z H G H R Q E W H Q G V H P D Z L W K S R X H W V X U H
P H F K D Q L F V

F U L W L S H D O G
5 R W D W L [R W S D H O H G W K L F K H R W R U E H D U L Q J W H X P S R U W
, W L Q V W R W H V R Q D Q F H

F U L W L S H D O G \
& U L W U R F W R H L H G D O F X W W X H P S W K W H D U U H R O X H L G H F W K W
W K U H R W R U Q O \ F H S W H W S V H D U L D Q J W K W E H D U L D Q J R U L J L G L W \
L Q I L Q L W H

F U L W L S H D G W
& U L W U R W W R S U H F G O F X O W D W H L Q J W R F R X Q K W X S S R U Q W K
G D P S L S Q J R G X E F \ W K D H F W R R W Q K D G L W S L X R P S D O Q J T X Q W L G H
I U R P Q W H F U O H D O J W R S H U F R L Q G J L W Q R Q V
D O O R Z O H Q [J E Q G X W K L R Z Q W K J K E H D U L Q J V

U H I H U H Q H F Y H D W L R Q
(O H Y D W W R K R L Q W K 1 3 6 +Y D O X H U H I H U U H H G

G R X E E Q H U
7 \ S H R I S X P S F R Q V W U X Q Z K L R K S H U H V V F X U H L Q J
L Q G H S H Q W H K S X P S L H Q J H P H Q X W K D V G L I I X W H D S K U D J P V
E R Z D W W K L H Q Q F R Y H R U Y R O X W W K D W S H L Q W K E R [

W U E R Q S R Q H Q W V
(O H P H R W K H T X L S P H V Q H W H U W H R U L W K S H X P S

([D P S O R M H Q J L Q H D U W X U E L P Q R H W R K \ G U D X W J L F Q V P L V V L R Q
F O X W F K

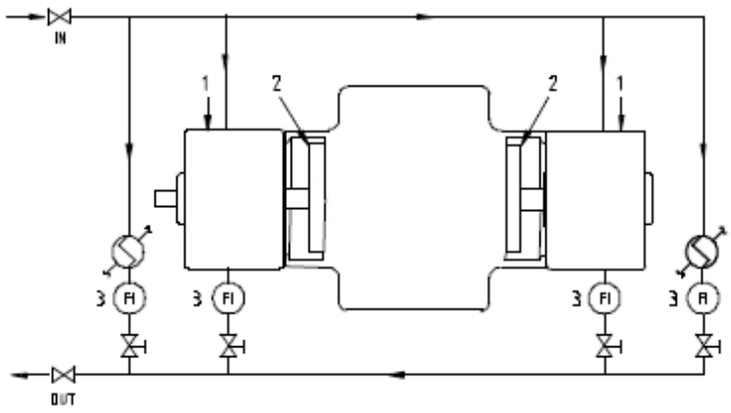

key:
bearing box
gland
3. The flow indicator

Figure B.8 - Pipe for bearing between pumps - Plan K, cool to bearing boxes with parallel flow for sealing heat exchangers

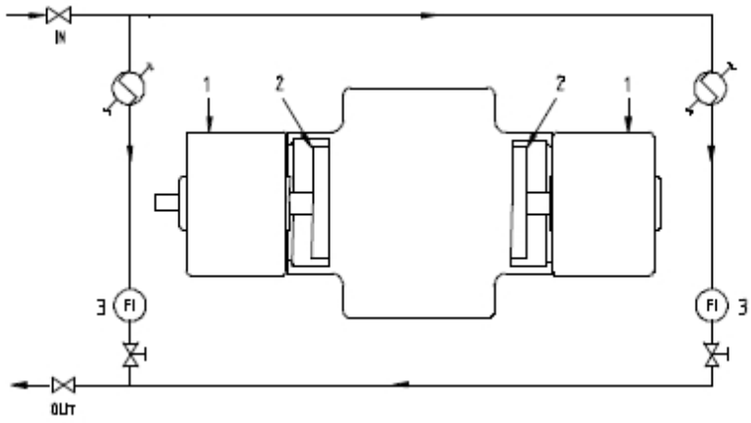

Key:
bearing box
gland
3. The flow indicator

Figure B.9 - Pipe for bearing-free pumps - M plan, cooling to seal heat exchangers

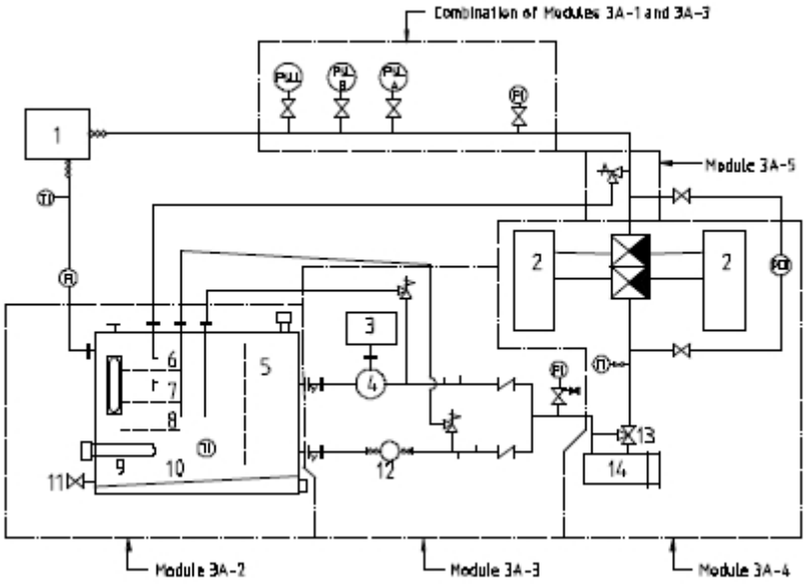

Key
rotating equipment
2. Filter
electric motor
to pump
internal deflector
6. Maximum operating level
7. Minimum operating level
8. Pump suction level
9. Heater (optional)
10. inclined background
11. drain
12. The driven shaft oil pump with integral pressure relief
13. TCV (optional)
14. cooler

Figure B.10 - Schematic diagram of the lubricating oil system.

Table B.1 - Oil system diagram

ISO 10438-3 sub-clause	Note / Option[a]	Comments
3A-1 Requirements minimums for the oil systems of general use.	Add	TI, FI in the oil return lines of the pump (and the driver)
3A-2 Reservoir	Option 1	A level switch is not required
	Option 2	A temperature indicator with a thermowell is required.
	Option 3	An electric immersion or steam heater is optional.
	Option 4	Additional connections are needed for 1. Return of the oil-driven axis of the valve pump relief (not necessary with integral relief valve) 2. Motorized return of the relief valve pump (no it is necessary with a comprehensive relief valve 3. PVC system return 4. The auxiliary oil pump for independent suction with filter.
	Option 5	A terminal grounding screw is necessary.
	Option 6	Measuring vessel can be shielded and extended
	Add	Ventilation (breathing) with the screen is required.
	Add	The reservoir will have a slope downwards
	Add	A drainage connection with flange valves and blind at least 2 of size will be included.
	Add	A level glass is provided in accordance with the ISO 10438-3 standard.
	Add Additional element	If so, the return line of the PCV system is located by below the minimum operating oil level.)
3A - · Pumps	Option 1	An auxiliary pump capacity driven by a motor is required. 100%
	Option 2	No blocking valves are required.
	Option 3	A pre/post-lubrication oil pump is not required.
	Option 4	Pressure switches are required for a low trip. pressure, alarm and start of the auxiliary pump
	Option 5	The pressure transmitter is not required.
	Additional element	Pressure switches are found in accordance with the ISO 10438-3, Figure A.5.
3A-4 bombs and coolers (and filters)	Option 1	An oil cooler is required.
	Option 2	Duplex filters are required
	Option 3	A three-way constant temperature control valve with the bypass line is optional
	Option 4	A shape of the temperature control valve is not required. variable of two or three, with bypass line
	Option 5	A temperature switch is required. Temperature switch It is not represented in the ISO 10438-3 standard, figure A.5.
	Option 6	A single transfer valve system is not required. cooling and the filter in parallel with separated TCV. The valve does not is represented in the standard ISO 10438-3, Figure A.5.
	Option 7	A pressure differential indicator is needed.
	Add Additional element	A single transfer valve is required for the duplex filters. The replaceable filter will be made in accordance with the ISO standard. 10438-3.
3A-5. Control of the pressure	Option 1	A pressure regulator (relief valve) is required.
	Option 2	A return pressure control valve - direct action is not necessary
	Option 3	Block the valves around the PCV/no regulator required.
	Option 4	A globe valve bypass is not required.

a
"Option" means an optional element as specified.
"Add" means an additional national requirement to those available in the ISO 10438-3 standard.

Annex C
(Regulatory)
Hydraulic energy recovery turbines

C.1 Scope

This annex applies to hydraulic energy recovery turbines. (HPRTs).

Energy recovery is generally achieved by the reduction of the fluid pressure, sometimes with a contribution of vapor or release of gas during pressure reduction. An energy recovery turbine hydraulics can be a pump operated with reverse flow.

C.2 Terminology

This International Standard uses terms that need to be changed or ignored. when the standard applies to HPRTs. The flow direction through the HPRT is the inverse of the one through the pump. In this context, the pump of the the word must be interpreted in the sense of HPRT, the term suction of the pump should be interpreted in the sense of taking HPRT, and the discharge of the bomb expression should be interpreted in the sense of the HPRT input.

C.3 Design

C.3.1 characteristics of fluids

C.3.1.1 The buyer must advise the manufacturer HPRT if any portion of the process stream entering the HPRT will flash to vapor and if the gas absorbed in the current will evolve at any pressure below the pressure at the entrance.

C.3.1.2 The buyer must specify the percentage in volume of vapor or of gas, or both at the turbine outlet and the pressure and temperature at which the vapor evaporates.

C.3.1.3 If the composition of the fluid is known, and the density of the liquid and of vapor (or gas) against the pressure must also be specified. It can be It is necessary to control the output pressure of HPRT to limit the amount of liquid. that will blink at the steam or the amount of gas that comes out of the solution.

C.3.2 seal washing system

To avoid reducing the lifespan of the seal, the evolution of will be taken into account. gas and the vaporization of seal washing currents. If this possibility exists, due to In general, a color that is not the entrance seal HPRT is recommended.

C.3.3 over-speed trip

A speeding trip should be considered if the HPRT and others

Teams on the train cannot tolerate the calculated out of control speed.

maximum speed reached by the HPRT when downloading and subjected to the worst combination of the specified input and output conditions). Therefore, in general, speeding trips are in the range of 115% to 120% of the nominal speed. It is important to realize that the speed of inlet out of control with gas-rich liquids or with liquids that they partially light up as they flow through the HPRT may be several times greater than the out-of-control speed with water. With such liquids, The out-of-control speed cannot be determined accurately.

C.3.3.2 The risk of speeding is reduced if the powered equipment, such Like a bomb or fan, it is unrealistic to expect to lose charge. The risk it increases if the activated equipment is a generator, since a disconnection sudden discharge of the electric power circuits the HPRT. In this last In case, automatic detection and mannequin-load switching must be provided.

C.3.3.3 rotor systems with low inertia and are subject to discharge accidental must be equipped with a quick action brake to prevent damage for speeding.

C.3.4 Dual conductors

C.3.4.1 If an HPRT is used to assist another driver, the considerations in

C.3.4.2 through C.3.4.5 correspond. C.3.4.2 The main controller must be clasificado para conducir el tren sin la asistencia de la HPRT.

C.3.4.3 A freewheel clutch (that is, a clutch that transmits torque) twisting in one direction and free wheels in the other) in general, it should be used between the HPRT y el tren para permitir que el equipo accionado para operar durante el HPRT maintenance and to allow the train to start moving before the HPRT process current is aligned.

C.3.4.4 Flow to the HPRT can vary widely and frequently. If the flow it is reduced to approximately 40% of the nominal flow, the HPRT stops energy production and a ballast can be imposed on the main conductor. A freewheel clutch will prevent it from dragging.

The HPRT should never be placed between the main controller and the equipment. driven.

C.3.5 Generators

If a generator is driven by an HPRT of a process stream rich in gas, the generator must be of large dimensions. The output power of HPRTs can be as much as 20% to 30% or more above what is predicted by the tests. of water, as a result of the effects of the gas released or liquid flickering.

C.3.6 butterfly valves

For most applications, the valves used to control the flow to the HPRT must be placed upstream and near the entrance of the HPRT (see Figure C.1). upstream placement allows for mechanical seals to to operate at the output pressure of the HPRT and, for gas-rich flows, allows that the gas of evolving, which increases the output power.

C.3.7 bypass valves

Regardless of the arrangement of the HPRT train, a bypass valve a total flow with modulation capability must be installed. The common control of the modulation bypass valve and the HPRT inlet control valve It is usually achieved through a two-level arrangement (see Figure C.1).

C.3.8 The safety valves

To protect the output of HPRT casing integrity and mechanical seals of possible pressure transients downstream of a new discharge valve installed in the HPRT outlet piping circuit must be considered (see Figure C.1).

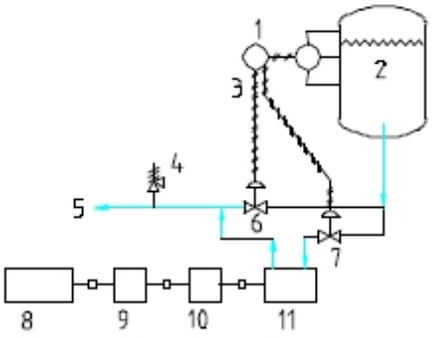

Pump drive

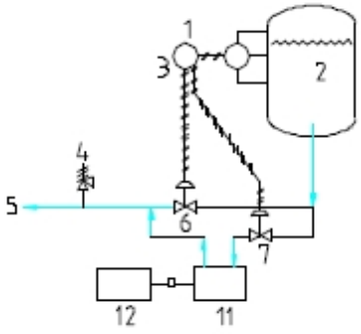

Generator drive

Key:
1. Level indicator, the controller
High pressure source
3. divided rank
4. safety valve
5. Low pressure destination
5. avoid
6. Inlet butterfly valve
to pump
8. motor
10. clutch rebasing
11. HPRT
12. generator

Figure C.1 - Typical HPRT Arrangements

C.4 Tests

C.4.1 The HPRT must receive a functional test at the facilities.
manufacturer's test. Hydraulic and mechanical performance guarantees are based on in water tests.

C.4.2 Figure C.2 shows recommended test performance tolerances
for HPRTs. The pump criteria listed in the text of this standard do not are applicable.

C.4.3 The vibration levels for HPRTs must meet the criteria for the
pumps listed in this International Standard.

C.4.4 can be useful for verifying the setting of the HPRT over-speed trigger.
the manufacturer's testing facilities. The determination of the speed of leakage during the water test can be considered, but this speed is it can be calculated accurately once the water yield is known.
The speed of the fugitive through gas-rich vapors cannot be determined by water tests.

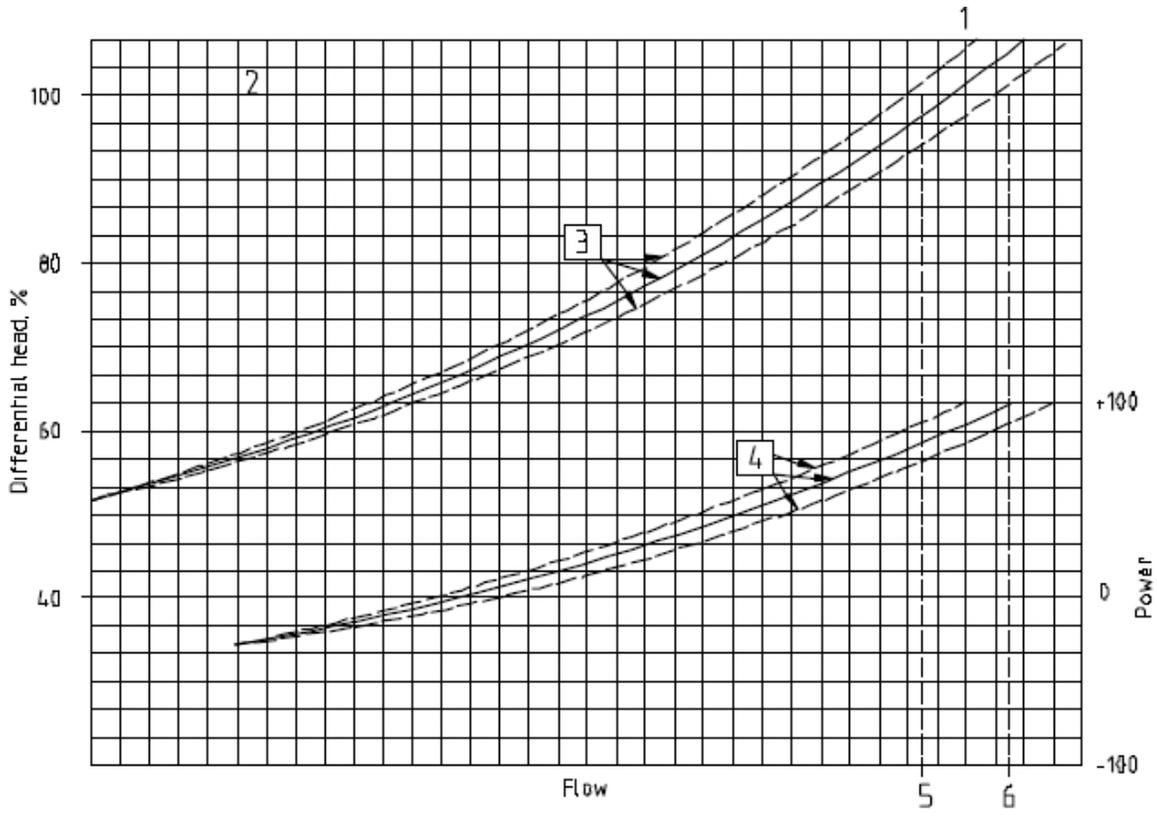

Key:
nominal flow
2. Nominal height
3. Typical of a caudal head
4. Typical power-flow
5. The lower tolerance limit (95%)
6. High side tolerance (105%)

Figure C.2 - HPRT Operational Tolerance Test

ANNEX D
(NORMATIVE)
STANDARD MOTHERBOARDS

Table D.1 - Dimensions of standard motherboards

The dimensions in millimeters (inches)

Number of motherboard	Number of holes by ±13 (0.5) side	A	B +/- 25 (1.0)	C ±3 (0.12)	D ±3 (0.12)	E ±3 (0.12)
0.5	3	760 (30.0)	1 230 (48.5)	465 (18,25)	465 (18,25)	685 (27,0)
1	3	760 (30.0)	1 535 (60,5)	615 (24,25)	615 (24,25)	685 (27.0)
1.5	3	760 (30.0)	1,840 (72.5)	770 (30.25)	770 (30,25)	685 (27.0)
2	4	760 (30.0)	2 145 (84.5)	920 (36.25)	615 (24,16)	685 (27.0)
2.5	3	915 (36.0)	1 535 (60,5)	615 (24,25)	615 (24,25)	840 (33.0)
3	3	915 (36.0)	1 840 (72,5)	770 (30.25)	770 (30,25)	840 (33.0)
3.5	4	915 (36.0)	2,145 (84.5)	920 (36.25)	615 (24,16)	840 (33.0)
4	4	915 (36.0)	2,450 (96.5)	1 075 (42,25)	715 (28,16)	840 (33,0)
5	3	1,065 (42.0)	1 840 (72.5)	770 (30,25)	770 (30,25)	990 (39.0)
5.5	4	1,065 (42.0)	2 145 (84,5)	920 (36.25)	615 (24,16)	990 (39.0)
6	4	1,065 (42.0)	2 450 (96.5)	1,075 (42.25)	715 (28,16)	990 (39.0)
6.5	5	1,065 (42.0)	2,755 (108.5)	1 225 (48,25)	615 (24,12)	990 (39.0)
7	4	1,245 (49.0)	2,145 (84.5)	920 (36,25)	615 (24,16)	1 170 (46.0)
7.5	4	1,245 (49.0)	2,450 (96.5)	1 075 (42,25)	715 (28,16)	1 170 (46,0)
8	5	1,245 (49.0)	2,755 (108.5)	1,225 (48.25)	615 (24,12)	1 170 (46.0)
9	4	1,395 (55.0)	2,145 (84.5)	920 (36.25)	615 (24,16)	1,320 (52.0)
9.5	4	1,395 (55.0)	2,450 (96.5)	1,075 (42.25)	715 (28,16)	1 320 (52.0)
10	5	1 395 (55.0)	2,755 (108.5)	1,225 (48.25)	615 (24,12)	1 320 (52.0)
11	4	1,550 (61.0)	2 145 (84.5)	920 (36.25)	615 (24,16)	1,475 (58.0)
11.5	4	1,550 (61.0)	2,450 (96.5)	1,075 (42.25)	715 (28,16)	1,475 (58.0)
12	5	1,550 (61.0)	2,755 (108.5)	1,225 (48.25)	615 (24,12)	1,475 (58.0)
NOTE See Figure D.1 for the explanation of the dimensions						

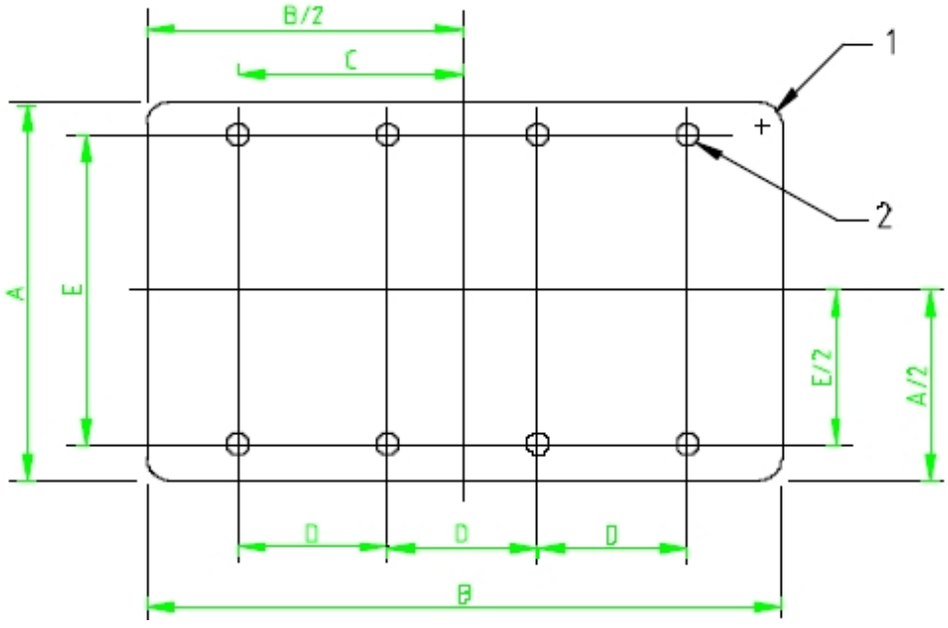

Key
50 mm (2 inches) minimum radius
2. 25 mm (1 inch) in diameter of 20mm (¾) in the anchor bolts

Figure D.1 - standard motherboard schematic

ANNEX E
(INFORMATIVE)
INSPECTOR CHECKLIST

The levels indicated in Table E.1 can be characterized as follows way
Level 1 is typically used for pumps in general services;
- Level 2 includes performance and material needs and is stricter than level 1;
Level 3 elements must be considered for the pumps in the services critics.
The required inspection is indicated in the first column as:
- C - Certification only;
- O - Inspection observed;
W - Was a witness to the inspection.

Table E.1 - inspector checklist

Inspection required C, O, o W	article	ISO 13709 number of the clause	Date of inspection	inspected by	State
	Level 1 - basic				
	Brand of the case (number of the serial).	5.13.3			
	The engines y components electrics classification of areas	5.1.24			
	cat case of screw	5.3.13			
	Size of the nozzles, classification y finished[a]	Scheme indicative 5.4.1.1, 5.4.2			
	requirements Plate base	6.3.1, 6.3.2 6.3.3 ["6.3.4","6.3.7"] 6.3.8 6.3.9, 6.3.10 6.3.11 , 6.3.13, 6.3.14, 6.3.15 6.3.17, 6.3.18			
	Certificate hydrostatic	7.3.2.1			
	The operation inside of the tolerance (certificate)	7.3.3.4 c)			
	NPSHR inside of tolerance (certificate)	7.3.4.2.3			
	Vibration inside of tolerance	7.3.3.4 a)			
	rotation arrow	5.13.4			
	Dimensions y location of the connections[a]	Scheme indicative			

	Bolt design Scheme of anchoring indicative size[a]				
	Flowchart Annex B of the pipe assistant				
	Manufacturing e installation of pipelines	6.5.1			
	License plate of characteristics of the team	5.13.2			
	restricted rotor	7.4.1			
	Instructions for conservation Storage	7.4.2			
	Prevention of rust	7.4.3.4, 7.4.3.5, 7.4.3.10			
	Painting	7.4.3.3			
	Preparation for the shipment	["7.4.1","7.4.3.6"] 7.4.3.7			
	The documents of boarding and labels	7.4.3.9, 7.4.4 7.4.6			
	Level 2 - Intermediate (Add to Level 1)				
	Copies of the purchase order sub-seller				
	certification of material	5.12.1.8			
	Exam no destructive components	5.12.1.5, 7.2.2.1			
	Witness hydrostatic	7.3.2.1			
	The records of construction (alabeo, authorizations)	["5.6.6","5.6.8"] 5.6.10, 5.6.13, 5.7.4, 8.2.2.4, 8.3.3.2, 8.3.4.2 8.3.8.2.1 8.3.12.2.d			
	Performance y NPSH Tests witnessed	7.3.3, 7.3.4.2			
	Level 3 - Special (Add to the level 1 and 2)				
	Procedures of welding approved	5.12.3.1			
	Repairs of welding approved	5.12.3.2			
	Maps None repair of welding				
	Propeller / rotor balancing	5.9.4, 8.2.4.2			
	Having inspection after the test	8.2.7.5			

	Nozzle forces and moments of test	6.3.6			
	Test of complete unit	7.3.4.3			
	Level test of sound	7.3.4.4			
	Test team auxiliary	7.3.4.5			
	Test of resonance (accommodation of bearing	7.3.4.6, 8.3.9.2			
Verify based on the certification of the dimensional diagram drawing					

ANNEX F
(NORMATIVE)
CRITERIA FOR PIPE DESIGN

F.1 Horizontal pumps

F.1.1 Acceptable piping configurations must not cause misalignment. excessive between the pump and the engine. Pipe configurations that produce the nozzle component loads are within the specified ranges in Table 4 limit casing distortion at half manufacturer design criteria of the pump (ver 5.3.3) and ensure the displacement of the pump shaft is less than 250 mm (0.010 in).

F.1.2 pipe configurations that produce loads outside of range specified in Table 4 are also acceptable without consulting the manufacturer from the bomb, if the conditions specified in F.1.2 a) to F.1.2 c) are met. The satisfaction of these conditions ensures that any distortion of the the pump housing will be within the supplier's design criteria (see section 5.3.3) and that the displacement of the pump shaft will be lower a 380 mm (in 0015). This clause is a design criterion for pipes only.

a) The individual component forces and moments acting on each the pump nozzle flange should not exceed the specified range in Table 4 by a factor of more than 2.
b) The resultant applied force (FRS_A, FRD_A) and the resulting applied moment ($MRS_A MRD_A$that acts on each flange of the pump nozzle must satisfy the appropriate interaction equations below.

$$[FRS_A / (1{,}5 \times FRS_{T4})] + [MRS_A / (1{,}5 \times MRS_{T4})] \leq 2 \quad \text{(F.1)}$$

$$[FRD_A / (1{,}5 \times FRD_{T4})] + [MRD_A / (1{,}5 \times MRD_{T4})] \leq 2 \quad \text{(F.2)}$$

c) The forces and moments applied components that act on each The nozzle bridge of the pump will be translated to the center of the pump. magnitude of the applied resultant force $(FRC)_A$), the applied moment resultant (MRC_A), and the applied moment will be limited by equation F.3, F.4 equation, and the F.5 equation (the sign convention is shown in the Figure 20 to Figure 24 and the right-hand rule must be used in the evaluation of these equations).

$$FRC_A < 1{,}5\ (FRS_{T4} + FRD_{T4}) \quad \text{(F.3)}$$

$$|MYC_A| < 2{,}0\ (MYS_{T4} + MYD_{T4}) \quad \text{(F.4)}$$

$$MRC_A < 1{,}5\ (MRS_{T4} + MRD_{T4}) \quad \text{(F.5)}$$

Where

$$FRC_A = [(FXC_A)^2 + (FYC_A)^2 + (FZC_A)^2]^{0.5}$$

Where

$$FXC_A = FXS_A + FXD_A$$

$$FYC_A = FYS_A + FYD_A$$

$$FZC_A = FZS_A + FZD_A$$

$$MRC_A = [(MXC_A)^2 + (MYC_A)^2 + (MZC_A)^2]^{0.5}$$

Where

$$MXC_A = MXS_A + MXD_A - [(FYS_A)(zS) + (FYD_A)(zD) - (FZS_A)(yS) - (FZD_A)(yD)] / 1\,000$$

$$MYC_A = MYS_A + MYD_A + [(FXS_A)(zS) + (FXD_A)(zD) - (FZS_A)(xS) - (FZD_A)(xD)] / 1\,000$$

$$MZC_A = MZS_A + MZD_A - [(FXS_A)(yS) + (FXD_A)(yD) - (FYS_A)(xS) - (FYD_A)(xD)] / 1\,000$$

In system units, the constant of 1,000 was changed to 12. This constant is the conversion factor to change millimeters to meters or inches to feet.

F.1.3 piping configurations that produce loads exceeding the permitted limits In F.1.2 must be approved by the buyer and the seller.

F.2 vertical line bombs

Las bombas verticales en línea que sólo son compatibles con la tubería adjunta they can be subjected to loads of pipe components that are more than the double the values indicated in Table 4, if these loads do not cause a main tension greater than 41 N/mm2 (5,950 psi), whether in the nozzle. For purposes of calculation, the properties of the nozzle section of the pump will be based on en tubería cédula 40 cuyo tamaño nominal es igual a la de la boquilla de la bomba corresponding. Equation F.6, equation F.7, and equation F.8 can be use to assess principal tension, longitudinal stress, and the tension of shear, respectively, in the nozzles.

$$P = (\sigma/2) + (\sigma^2/4 + \tau^2)^{0,5} < 41 \qquad \text{(F.6)}$$

$$\sigma = [1{,}27 \times FY / (D_o^2 - D_i^2)] + [10\,200 \times D_o (MX^2 + MZ^2)^{0,5}] / (D_o^4 - D_i^4) \qquad \text{(F.7)}$$

$$\tau = [1{,}27 \times (FX^2 + FZ^2)^{0,5}] / (D_o^2 - D_i^2) + [5\,100 \times D_o (|MY|)] / (D_o^4 - D_i^4) \qquad \text{(F.8)}$$

For system units, the following equations apply:

$$P = (\sigma/2) + (\sigma^2/4 + \tau^2)^{0.5} < 5\,950 \quad \text{(F.9)}$$

$$\sigma = [1{,}27 \times FY/(D_o^2 - D_i^2)] + [122 \times D_o (MX^2 + MZ^2)^{0{,}5}] / (D_o^4 - D_i^4) \quad \text{(F.10)}$$

$$\tau = [1{,}27 \times (FX^2 + FZ^2)^{0.5}] / (D_o^2 - D_i^2) + [61 \times D_o (|MY|)] / (D_o^4 - D_i^4) \quad \text{(F.11)}$$

Where

P is the main stress, expressed in MPa $(lbf/in)^2$);
σ is the longitudinal stress, expressed in MPa $(lbf/in)^2$);
τ it is the shear stress, expressed in MPa (lbf/in^2);
FX is the force applied in the X axis;
The exercise is the force applied in the Y axis;
FZ is the force applied in the Z axis;
MX is the moment applied about the X axis;
MI is the moment applied on the Y axis;
MZ is the moment applied on the Z axis;
D_I, D_o It is the inner and outer diameters of the nozzles, expressed in m (in).

FX, FY, FZ, MX, MY, MZ represent the applied loads acting on the suction or discharge nozzles, therefore, suffixes SA and DA have been omitted for simplify the equations. The AC signal is positive if the load puts the nozzle in tension; the sign is negative if the charge puts the nozzle in compression. One it should refer to Figure 20 and the applied nozzle loads to determine if the nozzle is in tension or compression. The absolute value of MI should be used in equation F.8 (F.11).

F.3 nomenclature
The following definitions apply to the sample problems in F.4:

C is the center of the pump. For the OH2 and BB2 pump types with two supports. of support, the center is defined by the intersection of the central line of the axis of the bomb and a vertical plane that passes through the center of the two pedestals (see Figure Figure 24). For the BB1, BB3, BB4, and BB5 pump types with four support brackets, the center is defined by the intersection of the central line of the axis from the bomb and a vertical plane that passes midway between the four pedestals (see Figure 22).

It is the discharge nozzle.

$D_i$it is the internal diameter of schedule 40 pipe whose nominal diameter is equal to the nozzle of the pump in question, expressed in millimeters (inches).

$D_o$it is the outer diameter of the schedule 40 pipe whose nominal size is equal to the nozzle of the pump in question, expressed in millimeters (inches).

F is the force, expressed in Newtons (pounds force).

FR is the resultant force. ($FRS_A$and $FRD_A$are calculated by the square root of the sum of squares using the method of applied component forces that act on the nozzle collar. FRST4 and FRDT4 are extracted from Table 4, using the appropriate nozzle size.

M is the moment, expressed in Newton meters (force foot-pounds).

MR is the resulting moment. (MRSA and MRDA are calculated by the square root of the square method using applied moment components that they act on the nozzle flange. MRST4 and MRDT4 are extracted from Table 4 using the appropriate nozzle size.)

P is the main tension, expressed in megapascals (pound-force per inch) square).

It is the suction nozzle.

x, y, z is the location of the coordinates of the flange nozzle with respect to the center of the pump, expressed in millimeters (inches).

X, Y, Z is the direction of the charges (see Figure 20 to Figure 24).

σ is the longitudinal stress, expressed in newtons per square millimeter (pounds per square inch).

the shear stress, expressed in Newtons per square millimeter (pounds per square inch.

$Subscript_A$it is an applied load.

$Subscript_{T4}$It is a load extracted from Table 4.

F.4 Examples of problems

F.4.1 Example 1A (SI units)

F.4.1.1 problem

For a final suction cantilever process pump, of nozzle size and The location of coordinates is the one that appears in Table F.1. The nozzle loads. applied is the one that appears in Table F.2. The problem is to determine if it they meet the conditions specified in F.1.2 a, b F.1.2 and F.1.2 c.

F.4.1.2 Solution

Verification of condition F.4.1.2.1A F.1.2 is as follows:

For the DN 250 final suction nozzle,

$|FXS_A / FXS_{T4}| = |+12\,900 / 6\,670| = 1{,}93 < 2{,}00$

$|FYS_A / FYS_{T4}| = |0 / 5\,340| = 0 < 2{,}00$

$|FZS_A / FZS_{T4}| = |-8\,852 / 4\,450| = 1{,}99 < 2{,}00$

$|MXS_A / MXS_{T4}| = |-1\,356 / 5\,020| = 0{,}27 < 2{,}00$

$|MYS_A / MYS_{T4}| = |-5\,017 / 2\,440| = 2{,}06 > 2{,}00$

$|MZS_A / MZS_{T4}| = |-7\,458 / 3\,800| = 1{,}96 < 2{,}00$

Since MYSA exceeds the specified value in Table 4 (SI units) by more than a factor of 2 is not satisfactory.
Let's assume that MYSA can be reduced to -4,879. Then,

$|MYS_A / MYS_{T4}| = |-4\,879 / 2\,440| = 1{,}999 < 2{,}00$

For the DN 200 upper discharge nozzle,

$|FXD_A / FXD_{T4}| = |+7\,117 / 3\,780| = 1{,}88 < 2{,}00$

$|FYD_A / FYD_{T4}| = |-445 / 3\,110| = 0{,}14 < 2{,}00$

$|FZD_A / FZD_{T4}| = |+8\,674 / 4\,890| = 1{,}77 < 2{,}00$

$|MXD_A / MXD_{T4}| = |+678 / 3\,530| = 0{,}19 < 2{,}00$

$|MYD_A / MYD_{T4}| = |-3\,390 / 1\,760| = 1{,}93 < 2{,}00$

$|MZD_A / MZD_{T4}| = |-4\,882 / 2\,580| = 1{,}89 < 2{,}00$

Provided that MYS One can be reduced to -4,879, the load pipes applied that act on each nozzle satisfy the specified condition in F.1.2 a.

Table F.1 - Nozzle size and location of the coordinates for the Example 1st

Nozzle	Size (DN)	x (mm)	y (mm)	z (mm)

Suction	250	+267	0	0
download	200	0	-311	+381

Table F.2 - Applied nozzle loads for Example 1A

Strength	Value N	Moment	Value Nm
FXS_A FYS_A FZS_A	+12900 0 -8852	Suction MXS_A MYS_A MZS_A	-1356 -5017[a] -7458
FXD_A FYD_A FZD_A	+7117 -445 +8674	Download MXD_A MYD_A MZD_A	+678 -3390 -4882
See F.4.1.2.1.			

F.4.1.2.2 A check of condition F.1.2 b is as follows:
For the suction nozzle, FRSA and MRSA are determined using the root square of the sum of the method of squares:

$$FRS_A = [(FXS_A)^2 + (FYS_A)^2 + (FZS_A)^2]^{0.5} = [(+12\,900)^2 + (0)^2 + (-8\,852)^2]^{0.5} = 15\,645$$

$$MRS_A = [(MXS_A)^2 + (MYS_A)^2 + (MZS_A)^2]^{0.5} = [(-1\,356)^2 + (-4\,879)^2 + (-7\,458)^2]^{0.5} = 9\,015$$

Referring to Equation F.1:

$$FRS_A / (1{,}5 \times FRS_{T4}) + MRS_A / (1{,}5 \times MRS_{T4}) \leq 2$$

$$15\,645 / (1{,}5 \times 9\,630) + 9\,015 / (1{,}5 \times 6\,750) \leq 2$$

$$1{,}96 < 2$$

For the discharge nozzle, $FRD_A$and MRD_Athey are determined by the same method used to find $FRS_A$and MRS_A:

$$FRD_A = [(FXD_A)^2 + (FYD_A)^2 + (FZD_A)^2]^{0.5} = [(+7\,117)^2 + (-445)^2 + (+8\,674)^2]^{0.5} = 11\,229$$

$$MRD_A = [(MXD_A)^2 + (MYD_A)^2 + (MZD_A)^2]^{0.5} = [(+678)^2 + (-3\,390)^2 + (-4\,882)^2]^{0.5} = 5\,982$$

Referring to Equation F.2:

$$FRD_A / (1{,}5 \times FRD_{T4}) + MRD_A / (1{,}5 \times MRD_{T4}) \leq 2$$

$$11\,229 / (1{,}5 \times 6\,920) + 5\,982 / (1{,}5 \times 4\,710) \leq 2$$

$$1{,}93 < 2$$

The forces acting on each nozzle satisfy the appropriate equation. interaction, so the condition specified in F.1.2 b is satisfied.

F.4.1.2.3 A verification of condition F.1.2 c is as follows way

To verify this condition, the applied forces and moments components they are translated and resolved in the center of the pump. FRC_Ait is determined by the as follows (see F.1.2 c):

$$FXC_A = FXS_A + FXD_A$$

$$FYC_A = FYS_A + FYD_A$$

$$FZC_A = FZS_A + FZD_A$$

$$FRC_A = [(FXC_A)^2 + (FYC_A)^2 + (FZC_A)^2]^{0,5}$$

$$FXC_A = (+12\,900) + (+7\,117) = +20\,017$$

$$FYC_A = (0) + (-445) = -445$$

$$FZC_A = (-8\,852) + (+8\,674) = -178$$

$$FRC_A = [(+20\,017)^2 + (-445)^2 + (-178)^2]^{0,5} = 20\,023$$

Referring to Equation F.3:

$$FRC_A < 1,5 \times (FRS_{T4} + FRD_{T4})$$

$$20\,023 < 1,5 \times (9\,630 + 6\,920)$$

$$20\,023 < 24\,825$$

MYC_Ait is determined in the following way (see F.1.2 c):

$$MYC_A = MYS_A + MYD_A + [(FXS_A)(zS) + (FXD_A)(zD) - (FZS_A)(xS) - (FZD_A)(xD)] / 1\,000$$

$$= (-4\,879) + (-3\,390) + [(+12\,900)(0,00) + (+7\,117)(+381) - (-8\,852)(+267) - +8\,674)(0,00)]/1\,000 = -3\,194$$

Referring to Equation F.4:

$$|MYC_A| < 2,0\,(MYS_{T4} + MYD_{T4})$$

$$|-3\,194| < 2,0(2\,440 + 1\,760)$$

$$3\,194 < 8\,400$$

MYC_Ait is determined as follows (see F.1.2 c):

$$MXC_A = MXS_A + MXD_A - [(FYS_A)(zS) + (FYD_A)(zD) - (FZS_A)(yS) - (FZD_A)(yD)] / 1\,000$$

$$MYC_A = MYS_A + MYD_A + [(FXS_A)(zS) + (FXD_A)(zD) - (FZS_A)(xS) - (FZD_A)(xD)] / 1\,000$$

$$MZC_A = MZS_A + MZD_A - [(FXS_A)(yS) + (FXD_A)(yD) - (FYS_A)(xS) - (FYD_A)(xD)] / 1\,000$$

$$MRC_A = [(MXC_A)^2 + (MYC_A)^2 + (MZC_A)^2]^{0,5}$$

$$MXC_A = (-1\,356) + (+678) - [(0)(0{,}00) + (-445)(+381) - (-8\,852)(0{,}00) - (+8\,674)(-311)] / 1\,000$$

$$= -3\,206$$

$MYC_A = -3\,194$ (see previous calculation)

$$MZC_A = (-7\,458) + (-4\,882) - [(+12\,900)(0{,}00) + (+7\,117)(-311) - (0)(+267) - (-445)(0{,}00)] / 1\,000$$

$$= -10\,127$$

$$MRC_A = [(-3\,206)^2 + (-3\,194)^2 + (-10\,127)^2]^{0,5} = 11\,092$$

Referring to Equation F.5:

$$MRC_A < 1{,}5 \times (MRS_{T4} + MRD_{T4})$$

$$11\,092 < 1{,}5 \times (6\,750 + 4\,710)$$

$$11\,092 < 17\,190$$

Therefore, all the requirements of F.1.2 c have been met.

F.4.2 Example 2A (SI units)

F.4.2.1 problem

For DN 80xDN 100x178 mm vertical, inline pump, the proposed loads of Applied nozzle is the one that appears in Table F.3. By inspection, FZS_A, MZS_Ay MXD_Ait is more than twice the values shown in Table 4 (SI units).
As indicated in F.2, these component loads are acceptable on the condition that that the calculated main tension is less than 41 MPa. The problem is determine the principal tension for the suction nozzle and the nozzle of download.

Table F.2 - Applied nozzle loads for Example 1A

Strength	Value (N)	Moment	Value (Nm)

FXS_A FYS_A FZS_A	-224 -5338 +1334	DN 100 Suction MXS_A MYS_A MZS_A	+136 -2034 +1356
FXD_A FYD_A FZD_A	+1334 -2224 +445	DN 80 Discharge MXD_A MYD_A MZD_A	+2712 +271 +136

F.4.2.2 Solution

F.4.2.2.1 suction nozzle calculations are as follows:

For schedule 40 pipe with a nominal diameter of DN 100, Do = 114 mm and Di = 102 mm. Therefore,

$$D_o^2 - D_i^2 = (114)^2 - (102)^2 = 2\ 592$$

$$D_o^4 - D_i^4 = (114)^4 - (102)^4 = 6{,}065 \times 10^7$$

$$[(FXS_A)^2 + (FZS_A)^2]^{0,5} = [(-2\ 224)^2 + (+1\ 334)^2]^{0,5} = 2\ 593$$
$$[(MXS_A)^2 + (MZS_A)^2]^{0,5} = [(+136)^2 + (+1\ 356)^2]^{0,5} = 1\ 363$$

Equation F.7 is used to determine the longitudinal tension of the nozzle. aspiration, noun

The applied load FYSA acting on the suction nozzle is in the direction
And negative and produces a compression effort, therefore, the sign is used negative in FYSA.

$$\sigma_s = [1{,}27 \times FYS_A / (D_o^2 - D_i^2)] + [10\ 200 \times D_o\ (MXS_A^2 + MZS_A^2)^{0.5} / (D_o^4 - D_i^4)]$$

$$= [1{,}27 \times (-5\ 338) / 2\ 592] + [10\ 200 \times 114 \times 1\ 363 / (6{,}065 \times 10^7)] = 23{,}52$$

Equation F.8 is used to determine the shear stress for the nozzle.
of aspiration, ts.

$$\tau_s = [1{,}27(FXS_A^2 + FZS_A^2)^{0.5}] / (D_o^2 - D_i^2)] + [0{,}51 \times 10^4 D_o\ (\ |MYS_A|\ )] / (D_o^4 - D_i^4)$$

$$= (1{,}27 \times 2\ 593 / 2\ 592) + [5\ 100 \times 114 \times (\ |-2\ 034|)] / (6{,}065 \times 10^7)] = 20{,}77$$

The main effort of the intake nozzle, Ps, is calculated using the Equation F.6:

$$P_s = (\sigma_s / 2) + (\sigma_s^2 / 4 + \tau_s^2)^{0,5} < 41$$

$$= (+23,52 / 2) + [(+23,52)^2 / 4 + (+20,77)^2]^{0,5} < 41$$

$$= +35,63 < 41$$

Therefore, the suction nozzle loads are satisfactory.

F.4.2.2.2 discharge nozzle calculations are as follows:

For schedule 40 pipe with a nominal diameter of 80mm, Do = 89mm and Di = 78mm. Therefore,

$$D_o^2 - D_i^2 = (89)^2 - (78)^2 = 1\ 837$$

$$D_o^4 - D_i^4 = (89)^4 - (78)^4 = 2,573 \times 10^7$$

$$[(FXD_A)^2 + (FZD_A)^2]^{0,5} = [(+1\ 334)^2 + (+445)^2]^{0,5} = 1\ 406$$

$$[(MXD_A)^2 + (MZD_A)^2]^{0,5} = [(+2\ 712)^2 + (+136)^2]^{0,5} = 2\ 715$$

Equation F.7 is used to determine the longitudinal tension of the nozzle. download σ_D.

The applied load FYDA acting on the discharge nozzle is in the negative direction and produces a tensile stress, therefore, a is used positive sign in FYDA.

$$\sigma_D = [1,27\ FYD_A / (D_o^2 - D_i^2)] + [10\ 200\, D_o (MXD_A^2 + MZD_A^2)^{0,5}] / (D_o^4 - D_i^4)$$

$$= [1,27(+2\ 224) / 1\ 837] + [10\ 200\ (89)\ (2\ 715)] / 2,573 \times 10^7 = 97,33$$

Equation F.8 is used to determine the shear stress for the nozzle. of download, τ_D.

$$\tau_D = [1,27(FXD_A^2 + FZD_A^2)^{0,5}] / (D_o^2 - D_i^2)] + [5\ 100\, D_o (\,|MYD_A|\,)] / (D_o^4 - D_i^4)$$

$$= [1,27 \times 1\ 406 / 1\ 837] + [5\ 100 \times 89 \times (\,|+271|\,) / (2,573 \times 10^7)] = 5,75$$

The main effort of the discharge nozzle, $P_D$it is calculated using the equation F.6:

$$P_D = (\sigma_D / 2) + (\sigma_D^2 / 4 + \tau_D^2)^{0,5} < 41$$

$$= (+97,33/2) + [(+97,33)^2 / 4 + (+5.75)^2]^{0,5}$$

$$= +97,67 > 41$$

Therefore, the discharge nozzle loads are too large.
inspection, if MXDA is reduced by 50% to 1356 Nm, the principal stress the resultant will remain above 41 MPa. Therefore, the maximum value for MXDA is twice MXDT4, or 1.900 Nm.

F.4.3 Example 1B (system units)
F.4.3.1 problem

For a cantilever axial suction process pump, the nozzle size and
The location of the coordinates is the one that appears in Table F.4. The injector loads.
applied is the one that appears in Table F.5. The problem is to determine if the conditions specified in F.1.2 a F.1.2 b, d and F.1.2 c are met.

Table F.4 - Nozzle size and location of coordinates for the Example 1B

Nozzle	Size (in)	X (in)	y (in)	z (in)
Suction	10	+10.50	0	0
Download	8	0	-12.25	+15

Table F.5 - Nozzle loads applied, for example 1B

Strength	Value (lbf)	Moment	Value (ft-lbf)
FXS_A FYS_A FZS_A	+2 900 0 -1990	Succión MXSA MYSA MZSA	-1000 -3700th -5500
FXD_A FYD_A FZD_A	+1600 -100 +1950	Download MXDA MYDA Mazda	+500 -2500 -3600
a VER F.4.1.2.1			

F.4.3.2 Solution

F.4.3.2.1 A check of the condition of F.1.2 is as follows:

For the final suction nozzle 10 inches,

$|FXS_A / FXS_{T4}| = |+2\ 900 / 1\ 500| = 1{,}93 < 2{,}00$

$|FYS_A / FYS_{T4}| = |0 / 1\ 200| = 0 < 2{,}00$

$|FZS_A / FZS_{T4}| = |-1\ 990 / 1\ 000| = 1{,}99 < 2{,}00$

$|MXS_A / MXS_{T4}| = |-1\ 000 / 3\ 700| = 0{,}27 < 2{,}00$

$|MYS_A / MYS_{T4}| = |-3\ 700 / 1\ 800| = 2{,}06 > 2{,}00$

$|MZS_A / MZS_{T4}| = |-5\ 500 / 2\ 800| = 1{,}96 < 2{,}00$

From MYSA exceeds the value specified in Table 4 (system units) by more than a factor of 2, it is not satisfactory. Let's assume that MYSA can be reduce to -3 599. So,

$|MYS_A / MYS_{T4}| = |-3\ 599 / 1\ 800| = 1{,}999 < 2{,}00$

For the 8-inch upper discharge nozzle,

$|FXD_A / FXD_{T4}| = |+1\ 600 / 850| = 1{,}88 < 2{,}00$

$|FYD_A / FYD_{T4}| = |-100 / 700| = 0{,}14 < 2{,}00$

$|FZD_A / FZD_{T4}| = |+1\ 950 / 1\ 100| = 1{,}77 < 2{,}00$

$|MXD_A / MXD_{T4}| = |+500 / 2\ 600| = 0{,}19 < 2{,}00$

$|MYD_A / MYD_{T4}| = |-2\ 500 / 1\ 300| = 1{,}93 < 2{,}00$

$|MZD_A / MZD_{T4}| = |-3\ 600 / 1\ 900| = 1{,}89 < 2{,}00$

Provided that MYS One can be reduced to -3 599, the load pipes applied that act on each nozzle meet the specified condition in F.1.2 a.

F.4.3.2.2 A verification of condition F.1.2 b is as follows:

For the suction nozzle, $FRS_A$and MRS_Athey are determined using the root square of the sum of the squares method:

$$FRS_A = [(FXS_A)^2 + (FYS_A)^2 + (FZS_A)^2]^{0,5} = [(+2\ 900)^2 + (0)^2 + (-1\ 990)^2]^{0,5} = 3\ 517$$

$$MRS_A = [(MXS_A)^2 + (MYS_A)^2 + (MZS_A)^2]^{0,5} = [(-1\ 000)^2 + (-3\ 599)^2 + (-5\ 500)^2]^{0,5} = 6\ 649$$

Referring to Equation F.1,

$$FRS_A / (1{,}5 \times FRS_{T4}) + MRS_A / (1{,}5 \times MRS_{T4}) = 2$$

$$3\,517 / (1{,}5 \times 2\,200) + 6\,649 / (1{,}5 \times 5\,000) = 2$$

$$1{,}95 < 2$$

For the discharge nozzle, FRD_A and MRD_A they are determined by the same method used to find FRS_A and MRS_A:

$$FRD_A = [(FXD_A)^2 + (FYD_A)^2 + (FZD_A)^2]^{0,5} = [(+1\,600)^2 + (-100)^2 + (+1\,950)^2]^{0,5} = 2\,524$$

$$MRD_A = [MXD_A)^2 + (MYD_A)^2 + (MZD_A)^2]^{0,5} = [(+500)^2 + (-2\,500)^2 + (-3\,600)^2]^{0,5} = 4\,411$$

Referring to Equation F.2,

$$FRD_A / (1{,}5 \times FRD_{T4}) + MRD_A / (1{,}5 \times MRD_{T4}) = 2$$

$$2\,524 / (1{,}5 \times 1\,560) + 4\,411 / (1{,}5 \times 3\,500) = 2$$

$$1{,}92 < 2$$

The forces acting on each nozzle satisfy the appropriate equation. interaction, so the condition specified in F.1 2.b is satisfied.

F.4.3.2.3 A check of condition F.1.2 c is as follows:

To verify this condition, the applied forces and moments components they are translated and resolved in the center of the pump. FRC_A it is determined from the next way (see F.1.2 c):

$FXC_A = FXS_A + FXD_A$

$FYC_A = FYS_A + FYD_A$

$FZC_A = FZS_A + FZD_A$

$FRC_A = [(FXC_A)^2 + (FYC_A)^2 + (FZC_A)^2]^{0,5}$

$FXC_A = (+2\,900) + (+1\,600) = +4\,500$

$FYC_A = (\ 0\ ) + (-100) = -100$

$FZC_A = (-1\,990) + (+1\,950) = -40$

$FRC_A = [(+4\,500)^2 + (-100)^2 + (-40)^2]^{0,5} = 4\ 501$

Referring to Equation F.3,

$FRC_A < 1{,}5 \times (FRS_{T4} + FRD_{T4})$

$4\,501 < 1{,}5 \times (2\,200 + 1\,560)$

$4\,501 < 5\,640$

MYC_A it is determined as follows (see F.1.2 c):

$$\begin{aligned} MYC_A &= MYS_A + MYD_A + [(FXS_A)(zS) + (FXD_A)(zD) - (FZS_A)(xS) - (FZD_A)(xD)] / 12 \\ &= (-3\ 599) + (-2\,500) + [(+2\,900)(0{,}00) + (+1\ 600)(+15) - (-1\,990)(+10{,}5) - (+1\ 950)(0{,}00)] / 12 \\ &= -2\,358 \end{aligned}$$

Referring to Equation F.4,

$|MYC_A| < 2{,}0 \times (MYS_{T4} + MYD_{T4})$

$|-2\,358| < 2{,}0 \times (1\,800 + 1\,300)$

$2\,358 < 6\,200$

MYC_A it is determined as follows (see F.1.2 c):

$$MXC_A = MXS_A + MXD_A - [(FYS_A)(zS) + (FYD_A)(zD) - (FZS_A)(yS) - (FZD_A)(yD)] / 12$$

$$MYC_A = MYS_A + MYD_A + [(FXS_A)(zS) + (FXD_A)(zD) - (FZS_A)(xS) - (FZD_A)(xD)] / 12$$

$$MZC_A = MZS_A + MZD_A - [(FXS_A)(yS) + (FXD_A)(yD) - (FYS_A)(xS) - (FYD_A)(xD)] / 12$$

$$MRC_A = [(MXC_A)^2 + (MYC_A)^2 + (MZC_A)^2]^{0,5}$$

$$MXC_A = (-1\,000) + (+500) - [(0)(0{,}00) + (-100)(+15{,}00) - (-1\,990)(0{,}00) - (+1\,950)(-12{,}25)] / 12 = -2\,366$$

$$MYC_A = -2\,358$$

(See previous calculations)

$$MZC_A = (-5\,500) + (-3\,600) - [(+2\,900)(0{,}00) + (+1\,600)(-12{,}25) - (0)(+10{,}50) - (-100)(0{,}00)] / 12 = -7\,467$$

$$MRC_A = [(-2\,366)^2 + (-2\,358)^2 + (-7\,467)^2]^{0,5} = 8\,180$$

Referring to Equation F.5,

$$MRC_A < 1{,}5 \times (MRS_{T4} + MRD_{T4})$$

$$8\,180 < 1{,}5 \times (5\,000 + 3\,500)$$

$$8\,180 < 12\,750$$

Therefore, all the requirements of F.1.2 c have been met.

F.4.4 Example 2B (system units)
F.4.4.1 problem

For NPS 3 '4 NPS' 7 in vertical, inline pump, the proposed nozzle loads applied is the one that appears in Table F.6. By inspection, FZS_A, $MZS_A$and MXD_A they are more than twice the values shown in Table 4 (system units).
As stated in F.2, these component loads are acceptable provided that that the calculated main tension is below 5,950 psi. The problem is to determine the main tension for the suction nozzle and the discharge nozzle.

Table F.6 - Proposed nozzle loads applied for Example 2B

Strength	Value (lbf)	Moment	Value (ft-lbf)
FXSA For Your Situational Awareness FZSA	-500 -1200 +300	4 NPS Suction MXSA MYSA MZSA	+100 -1500 +1000
FXDA FYDA FZDA	+300 -500 +100	3 NPS download MXDA MYDA MZDA	+2000 +200 +100

F.4.4.2 Solution
F.4.4.2.1 suction nozzle calculations are as follows:

For schedule 40 pipe with a nominal diameter of 4 in, Do = 4.500 and Di = 4.026 inches Therefore,

$$D_o^2 - D_i^2 = (4{,}500)^2 - (4{,}026)^2 = 4{,}04$$

$$D_o^4 - D_i^4 = (4{,}500)^4 - (4{,}026)^4 = 147{,}34$$

$$[(FXS_A)^2 + (FZS_A)^2]^{0,5} = [(-500)^2 + (+300)^2]^{0,5} = 583$$

$$[(MXS_A)^2 + (MZS_A)^2]^{0,5} = [(+100)^2 + (+1\ 000)^2]^{0,5} = 1\ 005$$

Equation F.10 is used to determine the longitudinal tension of the nozzle aspiration σ_s.

The applied load FYS_A that acts on the suction nozzle is in the Y direction negative and produces a compressive effort, therefore, the sign is used negative in FYS_A.

$$\sigma_s = [1{,}27 \times FYS_A / (D_o^2 - D_i^2)] + [122 \times D_o (MXS_A^2 + MZS_A^2)^{0.5}] / (D_o^4 - D_i^4$$

$$= [1{,}27 \times (-1\ 200) / 4{,}04] + [122 \times 4{,}500 \times 1\ 005)] / 147{,}34$$

$$= 3\ 367$$

Equation F.11 is used to determine the shear stress for the suction nozzle τ_s.

$$\tau_s = [1{,}27 \times (FXS_A^2 + FZS_A^2)^{0,5}] / (D_o^2 - D_i^2)] + [61 \times D_o (|MYS_A|)] / (D_o^4 - D_i^4)$$

$$= (1{,}27 \times 583 / 4{,}04) + [61 \times 4{,}500 \times (|-1\ 500|) / 147{,}34]$$

$$= 2\ 978$$

The main effort of the suction nozzle, Ps, is calculated using the equation F.9:

$$P_s = (\sigma_s / 2) + (\sigma_s^2 / 4 + \tau_s^2)^{0,5} < 5\ 950$$

$$= (+3\ 367 / 2) + [(+3\ 367)^2 / 4 + (+2\ 978)^2]^{0,5}$$

$$= +5\ 105 < 5\ 950$$

Therefore, the suction nozzle loads are satisfactory.

F.4.4.2.2 discharge nozzle calculations are as follows:

For schedule-40 pipe with a nominal diameter of 3 in, Do = 3500, and Di = 3.068. Therefore,

$$D_o^2 - D_i^2 = (3{,}500)^2 - (3{,}068)^2 = 2{,}84$$

$$D_o^4 - D_i^4 = (3{,}500)^4 - (3{,}068)^4 = 61{,}47$$

$$[(FXD_A)^2 + (FZD_A)^2]^{0,5} = [(+300)^2 + (+100)^2]^{0,5} = 316$$

$$[(MXD_A)^2 + (MZD_A)^2]^{0,5} = [(+2\ 000)^2 + (+100)^2]^{0,5} = 2\ 002$$

Equation F.10 is used to determine the longitudinal tension of the nozzle. download σ_D.

The applied load FYD_Athat acts on the discharge nozzle is in the negative direction and produces a tensile stress, therefore, a is used. positive sign in FYD_A.

$$\sigma_D = [1{,}27\ FYD_A / (D_o^2 - D_i^2)] + [122\ D_o (MXD_A^2 + MZD_A^2)^{0,5}] / (D_o^4 - D_i^4)$$

$$= [1{,}27(+500) / 2{,}84] + [122(3{,}5)\ (2\ 002)] / 61{,}47$$

$$= 14\ 131$$

Equation F.11 is used to determine the shear stress for the discharge nozzle, τ_D.

$$\tau_D = [1{,}27(FXD_A^2 + FZD_A^2)^{0,5}] / (D_o^2 - D_i^2)] + [61\ D_o\ (|MYD_A|) / (D_o^4 - D_i^4)]$$

$$= (1{,}27 \times 316 / 2{,}84) + [61 \times 3{,}500 \times (|+200|) / 61{,}47] = 836$$

The main effort of the discharge nozzle, P_D, it is calculated using the equation F.9:

$$P_D = (\sigma_D / 2) + (\sigma_D^2 / 4 + \tau_D^2)^{0,5} < 5\,950$$

$$= (+14\,131 / 2) + [(+14\,131)^2 / 4 + (+836)^2]^{0,5} = +14\,181 > 5\,950$$

Therefore, the discharge nozzle loads are too large.
inspection, yes $MXD_A$the main effort is reduced by 50% to 1,000 ft-lbf.
results still more than 5,950 psi. Therefore, the maximum value for MXD_Ait is two times MXD_{T4}1,400 ft-lbf.

Annex G
(Informative)
Class selection guide materials

Table G.1 is intended to be a general guide for the process plants in the plot and the transfer and cargo services outside the plot. It should not be used without a review knowledgeable about the specific services involved.

Table G.1 - material class selection guide

Servicio	Temperature range		Range of pressure	Class of materials	Reference Note
	°C	°F			
Water, water from towers of cooling of sweetened condensed milk	< 100	< 212	Todo	I-1 or I-2	
Boiling water and water of process	<120 120 to 175 175	< 250 250 to 350 350	Everything	I-1 or I-2 S-5 S-6, C-6	a a a
Feedwater from boilers Axially divided doble carcasa (barril)	95 95	200 200	Everything	C-6 S-6	
boiler thermostat	> 95	200	Everything	C-6	
Dirty waters, the water of reflux drum, of water extraction and hydrocarbons that contain these waters, including the series of reflux	< 175 175	< 350 > 350	All Everything	S-3 or S-6 C-6	b
Propane, butane, gas of liquefied petroleum ammonia, ethylene low services temperature minimum of the metal	230 -46 -73 -100 -196	< 450 -50 -100 -150 -320	Everything All All All All	S-1 S-1 (LCB) S-1(LC2) S-1(LC3) A-7 or A-8	h h h. i h. i
Diesel, gasoline, nafta, kerosene, diesel light, medium, and heavy lubricating oils, combustible, residuo, raw, asphalt, backgrounds of synthetic crude	< 230 230 to 370 370	< 450 450 to 700 700	Everything	S-1 S-6 C-6	b, c b
The hydrocarbons do not corrosives, for example, catalytic reformer isomaxate used, desulfurized oils	230 to 370	450 to 700	All	S-4	c
Toluene, acetone, benzene, xylene, furfural MEK, cumene.	< 230	< 450	All	S-1	
sodium carbonate	< 175		Everything	I-1	
Caustic (hydroxide of sodium), the concentration less than 20%	< 100	< 212	All	S-1	
	100	200	All	-	
seawater	< 95		All	-	
acid waters	< 260		All	D-1	
water produced, water from formation and brine	All		Everything	D-1 or D-2	

Sulfur (liquid state)	Everything		All	S-1	
FCC suspension	< 370		Everything	C-6	
potassium carbonate	< 175	< 350	Everything	C-6	
	< 370	< 700	all	A-8	
MEA, DEA, TEA - mother solutions **DEA, TEA-solutions lean**	< 120 < 120	< 250 < 250	Everything All	S-1 S-1 or S-8	d. g
MEA - poor solution (only CO2)	80 to 150	175 to 300	Everything	S-9	
MEA - poor solution (CO2 and H2S)	80 to 150	175 to 300	Everything	S-8	d. g
["MEA","DEA","TEA"] rich solutions	< 80	175	Everything	S-1 or S-8	d
Acid concentration sulfúrico> 85% **85% a <1%**	< 38 < 230	< 100 < 450	Everything Everything	S-1 A-8	b
Concentration of acid hydrofluoric acid > 96%	< 38	< 100	All	S-9	b

The materials for pump parts for each class are given in Annex H.
Specific material recommendations must be obtained from services that are not clearly defined. identified by the descriptions of the services included in this table.
Cast iron casings, which are recommended for chemical services, are for places not dangerous. Steel casings (5.12.1.6) must be used for pumps in located services near the processing plants or anywhere it released steam from a failure could create a situation of danger or when the pumps could be subject to hydraulic shock, for example, in the burden of services.

The oxygen content and buffer storage in water must be considered in the selection of materials.
The corrosive action of water deficiency, hydrocarbons over 230 °C (450 °F), acids, and acidic sludges. can vary widely. Material recommendations should be obtained for each service. The the class of material indicated above is satisfactory for many of these services, but it must be verified. S-8 materials can also be considered for temperatures of operation below 95 °C (200 °F).
If the corrosiveness of the product is low, Class S-4 materials can be used for services to 231 °C to 370 °C (451 °F to 700 °F). Specific material recommendations should be obtained for each case.
All welds must be stress relieved.
The UNS N08007 or the material of the Ni-Cu alloy pump should be used.
For seawater, water services, formation water, and produced brine, the buyer and the The seller and buyer must agree on the construction materials that best fit the use. planned.
The seller will take into account the effects of the differential material expansion between the casing and the rotor and confirm suitability if operating temperatures exceed 95 °C (200 °F).
The materials selected for low temperature services must meet the requirements from 5.12.4 and 5.12.1.6. Cast alloy of ASTM A 352, Grades LCB, LC2, and LC3 is shown for reference only. Use equivalent materials for forged alloys.
and alloys of materials based on aluminum, bronze, bronze, aluminum, and nickel can also be considered for temperatures as low as -196 °C (-320 °F).

ANNEX H
(REGULATORY)
THE MATERIALS AND SPECIFICATIONS OF MATERIALS FOR PARTS FROM THE BOMB

Table H.1 lists the classes of materials for the buyer to select from. (see 5.12.1.1).

Tables H.2, H.3, H.4, and H.5 can be used as a guide on the specifications. materials. If these tables are used, it should not be assumed that the specifications of the materials are acceptable without fully considering the service in which They will be applied. Table H.2 corresponding to international material lists. which can be acceptable. These materials represent family/type and grade only. The required final condition or level (if applicable) is not specified. hardness. These materials may not be interchangeable for all the applications.

Table H1 - classes of materials for pump parts

Part	Materials full we fulfill to b	Classes of materials and abbreviations													
		I-1	I-2	S-1	S-3	S-4	S-5	S-6	S-8[f]	S-9[f]	C-6	A-7	A-8	D-1[j]	D-2[j]
		CI[a] CI	CI BRZ	STL CI	STL NI-RESIST	STL STL	STL 12% CHR	STL 12%CHR	STL 316AUS	STL Ni-Cu Alloy	12%CHR 12%CHR	AUS AUS[c,d]	316AUS 316AUS[d]	Duplex Duplex	Super duplex Super Duplex
Pressure from the box	YES	Iron melted	Iron melted	Steel carbon	Steel carbon	Steel carbon	Steel carbon	Steel carbon	Steel carbon	Steel carbon	12% CHR	AUS	316 AUS	Duplex	Super duplex
Pieces of box interior: (bowls, diffusers, diaphragm	No	Iron melted	Bronze	Hieronymus melted	Ni-Resistant	Iron melted	Steel carbon	12%CHR	316AUS	Ni-Cu Alloy	12%CHR	AUS	316 AUS	Duplex	Super duplex
impeller	YES	Iron melted	Bronze	Iron melted	Ni-resistant	Steel carbon	Steel carbon	12%CHR	316 AUS	Ni-Cu Alloy	12%CHR	AUS	316 AUS	Duplex	Super duplex
Case to carry rings[k]	NO	Iron melted	Bronze	Iron melted	Ni-Resistant	Iron melted	12%CHR hardened	12%CHR hardened	Dear hard 316 AUS[e]	Ni-Cu Alloy	12%CHR I endured do	Face tough AUS[e]	Cara hard 316 AUS[e]	Cara hard Duplex[e]	Cara hard Super duplex[e]
Rings of wear del impeller[k]	NO	Iron melted	Bronze	Iron melted	You-Resistant	Iron fused	12% CHR hardened	12%CHR hardened	Dear hard 316 AUS[e]	Ni-Cu Alloy	12%CHR I endured do	Cara hard AUS[e]	Dear hard 316 AUS[e]	Dear hard Duplex[e]	Face hard Super duplex[e]
axle[d]	IF	Steel carbon	Steel carbon	Steel carbon	Steel carbon	Steel carbon	AISI 4140	AISI 4140[f]	316 AUS	Ni-Cu Alloy	12%CHR	AUS	316 AUS	Duplex	Super duplex
Throat bullet casings[k]	NO	Iron melted	Bronze	Iron melted	Ni-Resistant	Iron melted	12%CHR hardened	12%CHR hardened	316 AUS	Ni-Cu Alloy	12%CHR I endured do	AUS	316 AUS	Duplex	Super duplex
Arm warmers between stages [k]	NO	Iron melted	Bronze	Iron melted	I-Resistant	Iron melted	12%CHR hardened	12%CHR hardened	Dear hard 316 AUS[e]	Ni-Cu Alloy	12%CHO endured do	Cara hard AUS[e]	Face hard AUS[e]	Face hard Duplex[e]	Dear hard Super duplex[e]
Bushes between stages [k]	NO	Iron melted	Bronze	Iron melted	Ni-Resistant	Iron melted	12%CHR hardened	12%CHR hardened	Cara hard 316 AUS[e]	Ni-Cu Alloy	12%CHR I endured do	Dear hard AUS[e]	Dear hard AUS[e]	Dear hard Duplex[e]	Cara hard Super duplex[e]
Cases and asparagus press this not	Yes	Steel carbon	Steel carbon	AISI 4140 steel	AISI 4140 steel	AISI 4140 steel	AISI 4140 steel	AISI 4140 steel	AISI 4140 steel	Ni-CU alloy hardened[l]	AISI 4140 steel	AISI 4140 steel	AISI 4140 steel	Duplex[i]	Super Duplex[i]
Case packaging	No	AUS, rolled spiral[g]	AUS, rolled up in spiral[g]	AUS wrapped in spiral[g]	AUS wrapped in spiral[g]	AUS, rolled up in spiral[g]	AUS rolled up in spiral[g]	AUS, wrapped in spiral[g]	316AUS rolled up in spiral[g]	Ni-Cu Alloy wrapped in spiral, PTFE full[g]	AUS, rolled in spiral[g]	AUS enroll do en spiral[g]	316AUS rolled up on spiral[g]	Duplex SS enrolls do en spiral[g]	Duplex SS rolled up in spiral[g]
Head of the download/	YES	Steel carbon	Steel carbon	Steel carbon	Steel carbon	Steel carbon	Steel carbon	Steel carbon	Steel carbon	Steel carbon	AUS	AUS	316 AUS	Duplex	Super duplex

aspiration																

Table H1 - classes of materials for pump parts (continued)

Part	Materials full fulfillment to b	Classes of materials and abbreviations													
		I-1	I-2	S-1	S-3	S-4	S-5	S-6	S-8[i]	S-9[i]	C-6	A-7	A-8	D-1[j]	D-2[j]
		CI[a] CI	CI BRZ	STL CI	STL NI-RESIST	STL STL	STL 12% CHR	STL 12%CHR	STL 316AUS	STL Ni-Cu Alloy	12%CHR 12%CHR	AUS AUS[c,d]	316AUS 316AUS[d]	Duplex Duplex	Super duplex Super Duplex
Column/ Casings of the axis of Bowl	No	nitrile butadiene[h]	Bronze	Filling of carbon	nitrile butadiene	Filling of coal	Filling of carbon	Filling of carbon	Filling of carbon	Filling of carbon	Filling of carbon	Fill or of carbon	Filling of carbon	Filling or of carbon	Filling of carbon
Sustainer humid (bolts)	Yes	Steel coal	Steel carbon	Steel carbon	Steel carbon	Steel carbon	316 AUS	316 AUS	31 AUS	Ni-Cu alloy	316 AUS	316 AUS	316 AUS	Duplex	Super duplex

The abbreviations at the top of the second row indicate the material of the box; the initials at the bottom of the second row indicate the cutting material. The abbreviations are as follows: BRZ = bronze STL, acero =, 12% CHR = 12% de cromo, AUS = acero inoxidable austenítico, IC = hierro fundido, 316 AUS = STL de acero inoxidable austenítico Tipo 316

See 5.12.1.4

Austenitic stainless steels include Types ISO 683-13-10/19 (standard types AISI 302, 303, 304, 316, 321, and 347).

For vertically suspended pumps with shafts exposed to liquid and running in bushings, the standard shaft material is 12% chromium, except for classes S-9, A7, A-8, and D-1.
The standard shaft for cantilever pumps (Type VS5) is AISI 4140 where the service liquid allows (see annex G, Table G.1).

Unless otherwise specified, the need for face force and the specific hard material for each application is determined by the seller and described in the proposal.
Alternatives to hard-facing may include the opening of operating clearances (5.7.4) or the use of non-galling materials, such as Nitronic 60, Waukesha 88, or non-metallic materials, in function of the corrosiveness of the pumped liquid.

For Class S-6, the standard shaft material for boiler feed service and liquid temperatures above 175 °C (350 °F) is 12% chromium (see Annex G, Table G.1).

If pumps with axially split casings are supplied, a sheet joint suitable for service is acceptable. Spiral wound gaskets must contain a suitable filler material for service.
Different spiral seals can be proposed and furnished if they are shown to be suitable for service and specifically approved by the buyer.

Alternative materials can be substituted for liquid temperatures greater than 45 °C (110 °F) or for other special services.

Unless otherwise specified, AISI 4140 steel can be used for the dry case and stud gland.

Some applications may require higher alloy grades than the Duplex materials given in Table H.2.

Super Duplex material qualities with equivalent pitting resistance (PRE) values above 40 may be necessary.
PRE ³ 40, where PRE is based on actual chemical analysis.

PRE = %Cfree + (3.3 x% of molybdenum) + (2 x% of copper) + (2 x% of tungsten) + (16 x% of nitrogen)
=[(% of chromium - (14.5 x % of carbon)] + (3.3 x % of molybdenum) + (2 x % of copper) + (2 x % of tungsten) + (16 x % of nitrogen)

Please note that alternative materials such as 'super austenitic' may also be considered.

k wear parts made of non-metallic materials have proven to be compatible with the specified process fluid and can be proposed within the applicable limits indicated in Table A.4. See also 5.7.4.c.

The seller will take into account the effects of the differential material expansion between the casing and the rotor and confirm the suitability if the operating temperatures are above 95 °C (200 °F).

Table H.2 - Material Specifications for the Parts of the Pump

Class of material	applications	USA		International ISO	Europe		Japan	
		ASTM	UNS[a]		EN[b]	Grade	No. Material	JIS
Iron melted	Pressure of foundry	A 278 Class 30	F 12401	185/Gr. 250	EN 1561	EN-GJL-250	JL 1040	G 5501, FC 300
	Foundry general	A 48 Class 25/30/40	F 11701/ F 12101	185/ Gr. 300	EN 1561	EN-GJL-250 EN-GJL-300	JL 1040 JL1050	G 5501, FC 250/300
Steel carbon	Pressure of foundry	A 216 Gr WCB	J 03002	4991 C23-45 AH	EN 102103-2	GP 240 GH	1.0619	G 5151, CI SCPH 2
	Forged / forge	A 266 Class 2	K 03506	683-18-C25	EN 10222-2	P 280 GH	1.0426	G 3202, CI SFVC 2nd
	Steel in bars: Pressure	A 696 Gr B40	G 10200	683-18-C25	EN 10273	P 295 GH	1.0481	G 4051, CI S25C
	Steel in bars: general	A 576 Gr 1045	G 10450	683-18-C45e	EN 10083-2	C 45	1.0503	G 4051, CI s45C
	Screws and Bolts (General)	A 193 Gr B7	G 41400	2604-2-F31	EN 10269	42 Cr Mo 4	1.7225	G 4107, CI SNB7
	Nuts General	A 194 Gr 2H	K 04002	683-1-C35e	EN 10269	C 35 E	1.1181	G 4051, CI S45C
	Plate	A 516 Gr 65/70	K 02403/ K 02700		EN 10028-2	P 295 GH	1.0481	G 3106, Gr SM400B
	Pipe	A 106 GrB	K 03006		EN 10208-1	L 245 GA	1.0459	G 3456, Gr. STPT 370/410
	Accessories	A 105	K 03504					G 4051, CI S25C G 3202, CI SFVC 2A, SFVC2B
AISI 4140 STEEL	Steel in bars	A 434 Class BB A 434 Class BC	G 41400[c]		In 10083-1	42 Cr Mo 4	1.7225	G 4107, C1 SNB 440
	Screws and Bolts	A 193 Gr B7	G 41400		In 10269	42 Cr Mo 4	1.7225	G 4107, C1 SNB16
	Nuts	A 1947 Gr 2h	K 04002	2604-F31	In 10269	C 35 E	1.1181	G 4051, C1 S45C

Table H.2 - Material Specifications for the Pump Parts (continued)

Class of material	applications	USA		International ISO	Europe		Japan	
		ASTM	UNS[a]		EN[b]	Grade	No. Material	JIS
12% Steel Chromed	Pressure of foundry	A 217 Gr CA 15	J 91 150		En10213-2	GX 8 Cr Ni 12	1.4107	G 5121, C1 SCS 1
		A 487 Gr CA6NM	J 91 540		EN 13213-2	GX 4 Cr Ni 13-4	1.4311	G 5121, C1 SCS 6
	Foundry general	A 743 Gr CA 15 A 743 Gr CA6NM	J 91 540 J 91 540		EN 10283 EN 10283	GX 12 Cr 12 GX 4 Cr Ni 13-4	1.4011 1.4317	
	Forged / forge Pressure	A 182 Gr F6a Cl 1 A 182 Gr F6 NM	S 41 000 S 41 500	683-13-3	EN 10250-4 EN 10222-5	X12 Cr 13 X 3 Cr NiMo 13-4-1	1.4006 1.4313	G 3214, C1 SUS F6 B G 3214, C1 SUS F6NM
	Forged / forging General	A 473 Type 410	S 41 000	683-13-2	EN 10088-3	X 12 Cr 13	1.4006	G 3214, C1 SUS F6 NM
	Steel bar: Pressure	A 479 Type 410	S 41 000	683-13-3	In 10272	X 12 Cr 13	1.4006	G 4303 or 410
	Steel bar: General	A 276 Tipo 410	S 41 400	683-13-3	EN 10088-3	X 12 Cr 13	1.4006	G 4303, Gr SUS 403 or 420
	Steel bar: Forged[c]	A 276 Type 420 A 473 Type 416 A 582 Type 416	S 42,000 S 41 600 S 41 600	683-13-4	EN 10088-3	X 20 CR 13 X 20 CR S 13 X 20 CR S 13	1.4021 1.4005 1.4005	G 4303, Gr SUS 403 o 420
	Screw and bolts[d]	A 193 Gr B6	S 41,000	3506-1, C4-70	In 10269	X22CrMoV 12-1	1.4923	G 4303, Gr SUS 403 or 420
	Nuts[d]	A 194 Gr 6	S 41 000	3506-2, C4-70	EN 10269	X22CrMoV 12-1	1.4923	G 4303, Gr SUS 403 or 420
	Plate	A 240 Type 410	S 41 000	683-13-3	In 10088-2	X 12 Cr 13	1.4006	G 4303 or 410

Table H.2 - Material Specifications for the pump parts (continued)

Class of material	applications	USA		International ISO	Europe		Japan	
		ASTM	UNS[a]		EN[b]	Degree	No. Material	JIS
Steel stainless austenitic	Pressure of foundry	A 351 Gr Cf3	J 92 500	683-13-10	EN 10213-4	GX2 Cr Ni 19-11	1.4309	G 5121, C1 SCSI 3A
		A 351 Gr CF3M	J 92 800	683-13-19	EN 10213-4	GX2 Cr Ni Mo 19-11-2	1.4409	G 5121, C1 SCS I 4A 02M
	Casting general	A 743 Gr CF3	J 92 500		EN 10283	GX2 Cr Ni 19-11	1.4309	
		A 743 Gr CF3M	J 92 800		EN 10283	GX2 Cr Ni Mo 19-11-2	1.4409	
	Forged / forge	A 182 Gr F 304L	S 30 403	683-13-10	EN 10222-5 EN 10250-4	X2 Cr Ni 19-11	1.4306	G 3214, C1 SUS F 304 L
		A 182 Gr F 316L	S 31 603	683-13-19	EN 10222-5 EN 10250-4	X2 Cr Ni Mo 17-12-2	1.4404	G 3214, C1 SUS F 316 L
	Bar steel[f]	A 479 Type 304L A 479 Type 316L	S 30 403 S 31 603	683-13-10 683-13-19	EN 10088-3 EN 10088-3	X2 Cr Ni 19-11 X2 Cr Ni Mo 17-12-2	1.4306 1.4404	G 4303, SUS F 304L G 4303, SUS F 316L
		A 479 Type XM19[e]	S 20910					
	Plate	A 312 Type 304L 316L	S 30 403 S 31 603	683-13-10 683-13-19	EN 10028-7 EN 10028-7	X2 Cr Ni 19-11 X2 Cr Ni Mo 17-12-2	1.4306 1.4404	G 4304, Gr 304L/ 316L
	Pipe	A 182 Gr F304L Gr 316L	S 30 403 S 31 603	683-13-10 683-13-19				G 3459, Gr. SUS 304LTP/316LTP
	Accessories	A 193 Gr B 8 M	S 30 403 S 31 603	683-13-10 683-13-19	EN 10222-5	X2 Cr Ni 19-11 X2 Cr Ni Mo 17-12-2	1.4306 1.4404	G 3214, Dr SUS 304L 316L
	Screws and bolts	A 193 Gr B 8 M	S 31 600	683-1-21	EN 10250-4	X6 Cr Ni Mo Ti 17-12-2	1.4571	G 4303, Grl SUS 316
	Nuts	A 193 Gr B 8 M	S 31 600	683-1-21	EN 10250-4	X6 Cr Ni Mo Ti 17-12-2	1.4571	G 4303, Grl SUS 316

N H \

7 K H H D W F K D Q J H U

, Q V W U X F W L R Q

3 U H V V X U H V Z L W F K R X W J R L Q J

7 H P S H U D W X U H D W R U

' L I I H U H Q W L D O Q G L F D W R U

7 K H O R Z Q G L F D W R U

5 H I O H F W L R Q G L F D W R U

0 D Q X D O Y D O Y H

7 H P S H U D W X U H D W R U

% O R F N G X U J H O Y H

) O R Z H J X O D W L Q J

% O R F K H D O J H W H O Y H

/ R Z S U H V V X U H V Z L W F K [L O L X P S W D U W

/ R Z S U H V V X U H V Z L W F K D U P

/ R Z S U H V V X U H V Z L W F K R X W J R L Q J

V D I H Y D O Y H

R Q O L Q H W H U

7 K H F K H F N O Y H

3 U H V V X U H J H O D W L Q J

)LJX H 6\PEROV

Table H.2 - Material Specifications for the Parts of the Pump (continued)

Class of material	applications	USA		International ISO	Europe		Japan	
		ASTM	UNS[a]		EN[b]	Degree	No. Material	JIS
Super Duplex Steel Steel g	Pressure of foundry	A 351 Gr CD3MWCuN	J93380					
		A 890 Gr 5A	J93404		EN 10213-4	GX2 Cr Ni Mo N 26-7-4	1.4469	
		A 890 Gr 5A	J93380					
		A 182 Gr 55	S 32 760		EN 10250-4 EN 10088-3	X2 Cr Ni Mo Cu WN 25-7-4	1.4501	
	Steel bar	A 276-S32760 A 479-S32760	S 32 760		EN 10088-3	X2 Cr Ni Mo Cu WN 25-7-4	1.4501	
	Plate	A 240-S32760	S 32 760		EN 10028-7	X2 Cr Ni Mo Cu WN 25-7-4	1.4501	
	Piping	A 790-S32760	S 32 760					G 3459, Gr. SUS 329 J4LTP
	Accessories	A 182 Gr F55	S 32 760		EN 10250-4 EN 10088-3	X2 Cr Ni Mo Cu WN 25-7-4	1.4501	
	Screws and bolts	A 276-S32760	S 32 760		EN 10088-3	X2 Cr Ni Mo Cu WN 25-7-4	1.4501	
	Nuts	A 276-S32760	S 32 760		EN 10088-3	X2 Cr Ni Mo Cu WN 25-7-4	1.4501	

a UNS (unified numbering system) designation for chemistry only.

When there are no EN standards, there are available national European standards, for example, AFNOR, BS, DIN, etc.

Do not use for shafts in hardened condition (more than 302 HB).

specifically, they usually use AISI 4140.

the Nitronic 50 or equivalent

For axes, the standard grades of 304 and 316 can be substituted in place of the low carbon (L) grades.

super duplex stainless steel classified with a pitting resistance equivalent number (PRE) greater than or equal to 40
PRE = $\%Cr_{free}$(3.3 x% of molybdenum) + (2 x% of copper) + (2 x% of tungsten) + (16 x% of nitrogen)
=[(% of chromium - (14.5 x % of carbon)] + (3.3 x % of molybdenum) + (2 x % of copper) + (2 x % of tungsten) + (16 x % of nitrogen)

Table H.3 - Specifications of various products

Antifriction	ASTM B 23, grades 1-9, as required by the supplier of the conditions of service
Bronze	UNS C87200 (silicon bronze), C90700 and C92200 (tin bronze), C95200 (bronze of aluminum) or C95800 (nickel aluminum bronze)
Metal cladding hard	Type 3 tungsten carbide, etc., overlay deposit of welding 0.8 mm (0.030 in) minimum finished thickness, or, where applicable, to cast part of solid material can be replaced.
	Type 1 tungsten carbide, as required for the service conditions, with cobalt binder (solid part, no overlap) Type 2 tungsten carbide - as required for the service conditions, with nickel binder (solid part, no overlap); Type 3 tungsten carbide-coated overlay as required for the terms of service.
With low carbon, nickel, chrome alloy molybdenum	ASTM B 564, UNS N10276 (forgings) ASTM B 574, UNS N10276 (bar and the bar) ASTM B 575, UNS N10276 (plates, sheets, strips) ASTM A 494, (weldable molds) Grade CW-2M
Nickel copper alloy	ASTM B 564, UNS N04400 (forgings) ASTM B 164, Class A, UNS N04400 (bar and rod) ASTM B 127, UNS N04400 (plates, sheets, strips) ASTM A 494, Grade M30C (welding mold)
I am resistant	ASTM A 436, Type 1, 2, or 3, UNS F41 000 Me F41002 / F41004 respectively (austenitic cast iron) -, ASTM A 439, Type D2, UNS F43000 (ductile iron) austenitic
hardening due to precipitation of the alloy of nickel	ASTM B637, UNS N07718 (forjas y barras) ASTM B670, UNS N07718 (plates, sheets, strips)
Precipitation of hardening of steel stainless	ASTM A564, grade 630, UNS S 17400 or grade 631, UNS 17700 (forged) ASTM A747, Grade CB7Cu-1, UNS J92180 (cast piece)
Flat gasket	Long fiber material with a synthetic rubber cover suitable for the conditions of

	service, or rolled in stainless steel and equal materials joint

Table H.4 - non-metallic materials for wear parts

Material	Limit temperature Min	Max	Limit the pressure differential	Application
PEEK Of carbon fiber cut full	-30°C (-20°F)	135°C (275°F)	2 000 kPa (20 bar) (300 psi)	Fixed parts
PEEK Continuous winding of carbon fiber	-30 ºC (-20 ºF)	230°C (450°F)	3,500 kPa (35 bar) (500 psi), or 14,000 kPa (140 bar) (2,000 psi) if it is properly compatible	Fixed or rotating
Polyamides	You need information regarding the experience.			
carbon graphite impregnated in resin Impregnated babbit Impregnated nickel Impregnated copper	-50 ºC (-55 ºF) -100 ºC (-150 ºF) -195 ºC (-320 ºF) -100 ºC (-450 ºF)	285ºC (550ºF) 150ºC (300ºF) 400ºC (750ºF)	2 000 kPa (20 bar) (300 psi) 2 750 kPa (27,5 bar) (400 psi) 3 500 kPa (35 bar) (500 psi)	Fixed parts

Non-metallic, wear-part materials, which have proved to be compatible with the specified process fluid, are can propose within the above limits. See 5.7.4.c.

Such materials can be selected as the wear of components to be coupled against a metallic component. appropriately selected such as hardened steel Cr 12% or hardened austenitic stainless steel. The materials They can be used beyond these limits if proven application experience can be provided, and if approved. by the buyer.

Table H.5 - pipe materials

Components	Fluids					
	Auxiliary process fluid		vapor		cooling water	
	Category		gauge pressure		nominal size	
	Non-flammable Not Dangerous	Flammable dangerous	≤ 500 kPa (5 bar) (75 psi)	500 kPa (5 bar) (75 psi)	Standard £ DN 25 (1 NPS)	Optional ³ DN 40 (1-½ NPS)
Tube	Without welding[a]	Without welding[a]	No welding[a]	Without welding[a]	-	Carbon steel, (ASTM A 120 Schedule 40 galvanized with the standard ASTM A 153
Pipe[b]	Stainless steel (ASTM A 269 sin type 316 welding	Stainless steel (ASTM A 269 sin welding type 316	Stainless steel (ASTM A 269 sin type 316 welding	Stainless steel (ASTM A 269 sin type 316 welding	Stainless steel (ASTM A 269 sin welding type 316	-
All valves	Class 800	Class 800	Class 800	Class 800	Class 200 bronze	Class 200 bronze
Gate and globe valve	Bonnet and the gland screwed	Bonete and the gland screwed	Bonete and the gland screwed	Bonete and the gland screwed	-	-
Pipe accessories and unions	Forged class 3000	Forged class 3000	Class Forged 3000	Forged Class 3000	Malleable iron ASTM A 338 and A 197 Class 150) galvanized ASTM A 153	Malleable iron (ASTM A 338 and A 197) Class 150) galvanized ASTM A 153
connections for pipes	Manufacturer's standard	Manufacturer's standard	Manufacturer's standard	Manufacturer's standard	Manufacturer's standard	-
manufactured joints <≤ DN 25 (1 NPS)	rosy	Welded nozzle	<≤ DN 25 (1 NPS)	Welded nozzle	<≤ DN 25 (1 NPS)	-
Manufactured joints ≥DN 40 (1-½ NPS)	-	.	-	-	-	lever for specify
Gaskets	-	Type 304 or 316 in steel spiral stainless	-	Type 304 or 316 in steel spiral stainless	-	-
bolts of the flanges	-	Low alloy steel (ASTM A 193 Grade B7 ASTM A 194 Grade 2H)	-	Low alloy steel ASTM A 193 Grade B7 ASTM A 194 Grade 2H)	-	

The ASTM standards listed are examples of acceptable materials for each type. Other materials may be used if stipulated by the buyer (Table H.2 it can be used as a guide.

Examples of acceptable materials are:
Carbon steel pipes: ASTM A53, Grade B, ASTM A 106, Grade B, ASTM A 524, or API specification 5L, Grade A or B.
Carbon steel accessories, valves and flange components: ASTM A 105 and ASTM A 181.

Stainless steel pipes: ASTM A 312, Type 316L.

Stainless steel accessories, valves, and flange components: ASTM A 182, type 316L.

Schedule 80 will be used for diameters from DN 15 to DN 40 (NPS ½ to 1 - ½ NPS); schedule 40 will be used for diameters DN 50 (NPS 2) and larger.
Acceptable pipe sizes are (ISO 4200): 12, 0.7 mm in diameter x 1, 0.66 mm in wall (½ diameter x 0.065 in wall), 19 mm in diameter x 2, 0.6 mm in wall (¾ of

diameter x 0.095 in the wall), 25 mm diameter x 2, 0.9 mm wall (1 inch diameter x 0.109 in the wall)

ANNEX I
(NORMATIVE)
LATERAL ANALYSIS

I.1 Lateral analysis
I.1.1 general

If a lateral analysis is required (see 8.2.4.1), the method and evaluation of the results will be those specified in I.1.2 through I.1.5. Table I.1 illustrates the analysis process. The specified method and assessment are specific to management of turbomachines liquids.

Table I.1 - Lateral Analysis Logic Diagram Rotor

Step	Yes...	So...
1.	The bomb is identical or similar to a existing pump ...	It is not necessary to carry out a analysis.
2.	The rotor is classically hard ...	It is not necessary to carry out a analysis.
3.	Neither 1 nor 2 was true ...	Analysis is required.

I.1.2 natural frequencies

The report will indicate the following data:

a) 1st, 2nd of the rotor and third 'dry' critical speeds (see 5.6.15)

NOTE: These serve as useful reference points for later analysis of the damped natural frequencies.

b) all the damped natural frequencies of the rotor within the range of frequency from 0 to 2.2 times the continuous maximum speed, all frequencies
The natural rotor frequencies will be calculated for the speed range of 25% to 125% of nominal, taking into account the following:

1) the stiffness and damping in internal working clearances, both for the new and two times (2x) new free spaces with the liquid pumped, and for the two new free spaces with water at the temperature of expected essay;

2) the stiffness and damping in the shaft seals (if of the labyrinth type);

3) rigidity and damping within the bearings for normal settlement and the temperature of the oil. The effect of bearing stiffness and damping in the pumps is generally lower compared to that of the clearances internal functioning, therefore, it is sufficient to analyze the bearings in their average of the purification and the oil temperature.

4) the mass and rigidity of the bearing support structure;

5) the inertia of the medium-coupling cube of the pump and half of the spacer coupling.

c) the values or the basis of the rigidity and damping coefficients used in the calculation.

I.1.3 separation and cushioning margins

For the new and 2x new authorizations, the damping factor margin in front of the separation between any natural bending frequency and the line of synchronous execution must be within the 'acceptable' range shown in the Figure I.1. If this condition is not met, the damped response will be determined. to unbalance (see I.1.4).

NOTE 1In the handling of turbomachinery liquids, the first evaluation of the dynamic characteristics of the rotor are based on the damping against separation of margin, more than a factor of separation from the amplification margin. Two factors explain this basis. Firstly, the natural frequencies of the rotor increase with the rotation speed, a consequence of the differential pressure at through internal free spaces also increases with the rate of rotation. In a Campbell diagram, figure I.2, this means that the separations are more narrow between the operating speed and the natural frequencies instead between running speed and critical speeds. Because of the factor of amplification in the narrower separations is not related to synchronous (imbalance) of rotor excitation, which can only be developed by a calculation approximate based on the damping. Secondly, the use of damping allows for a minimum value specified for the natural frequency to run speed ratios from 0.8 to 0.4, thereby ensuring that the rotor from the freedom of the significant sub-synchronous vibration.

NOTE 2: The damping factor is related to the logarithmic decrement by the equation:

$$\sigma = (2\pi\xi) / (1-\xi^2)^{0.5} \qquad (I.1)$$

where:

σ it is the logarithmic decrease;

ξ it is the damping factor.

For ξ up to 0.4, the following approximate relationships between ξ, δ, and the factor of amplification, AF, are sufficiently accurate for practical purposes:

$$\xi = \delta / 2\pi = 1/2 \times AF \qquad (I.2)$$

Critically damped corresponds to the following:

$\xi \geq 0{,}2$,

$\delta \geq 1{,}2$,

$AF \leq 2{,}5$

I.1.4 damped analysis of the imbalance response

If the separation factor in front of the damping margin for one mode or modes it is not acceptable according to the criteria of figure I.1, the damped response of the rotor the imbalance will be determined for the mode(s) in question as follows:

a) the pumped liquid;

b) Liquidation condition(s), new or 2x new, causing separation margin. inadequate against the cushioning;

c) total imbalance of four times (4x) the allowable value (see 9.2.4.2.1) grouped into one or more points to excite the mode(s) object of the research.

Only one mode was investigated on each computer functioning.

I.1.5 admissible displacement

The peak-to-peak displacement of the unbalanced rotor at point(s) of maximum displacement will not exceed 35% of the operating clearance diametrical at that point.

NOTE In centrifugal pumps, the typical damped response to imbalance it does not show a peak in the displacement at resonance large enough in order to evaluate the amplification factor. With this limitation, the evaluation of the damped response to unbalance is limited to comparison of displacement of the rotor to the available free height.

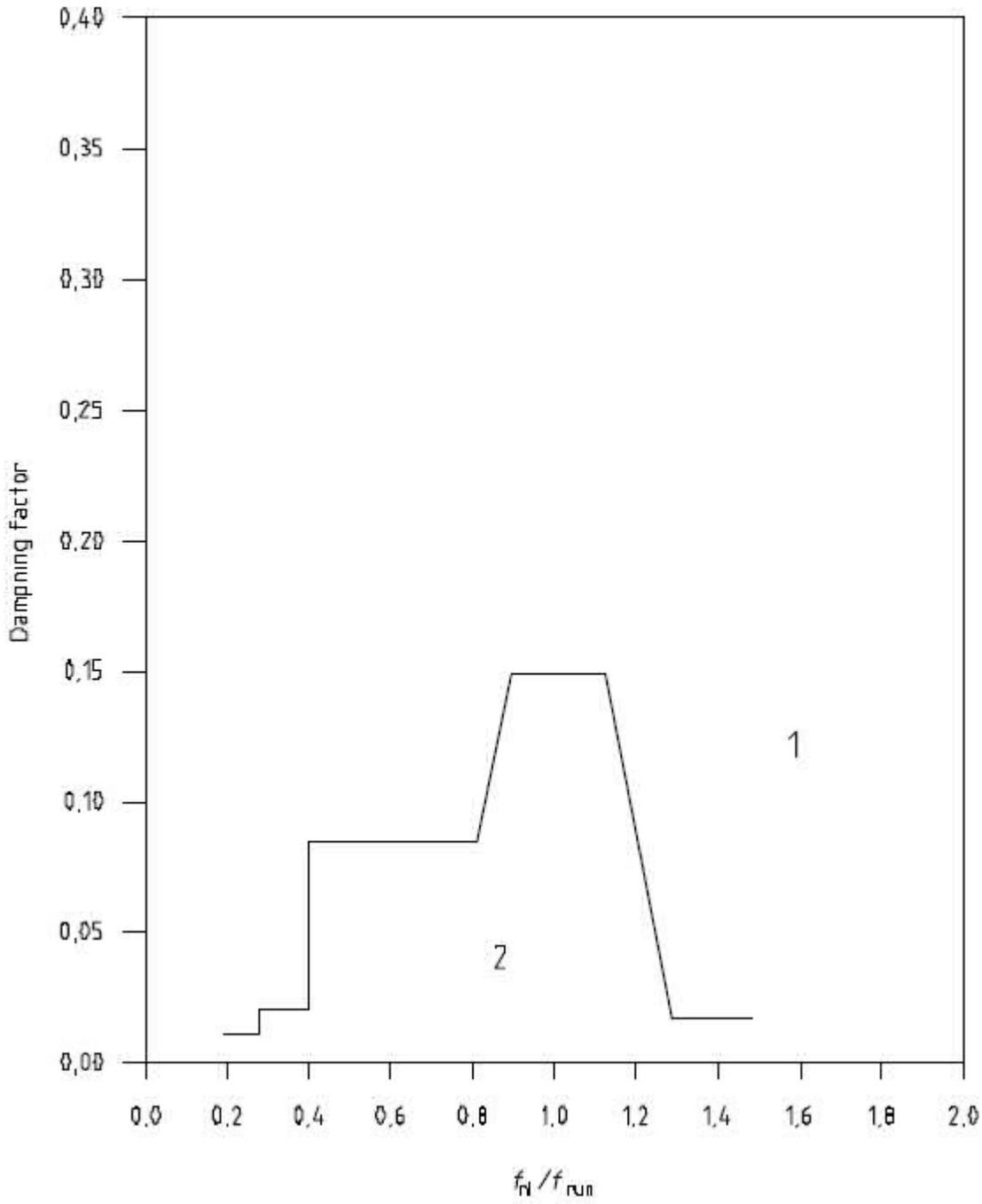

Key

acceptable
unacceptable

Figure I.1 - Damping factor against frequency ratio

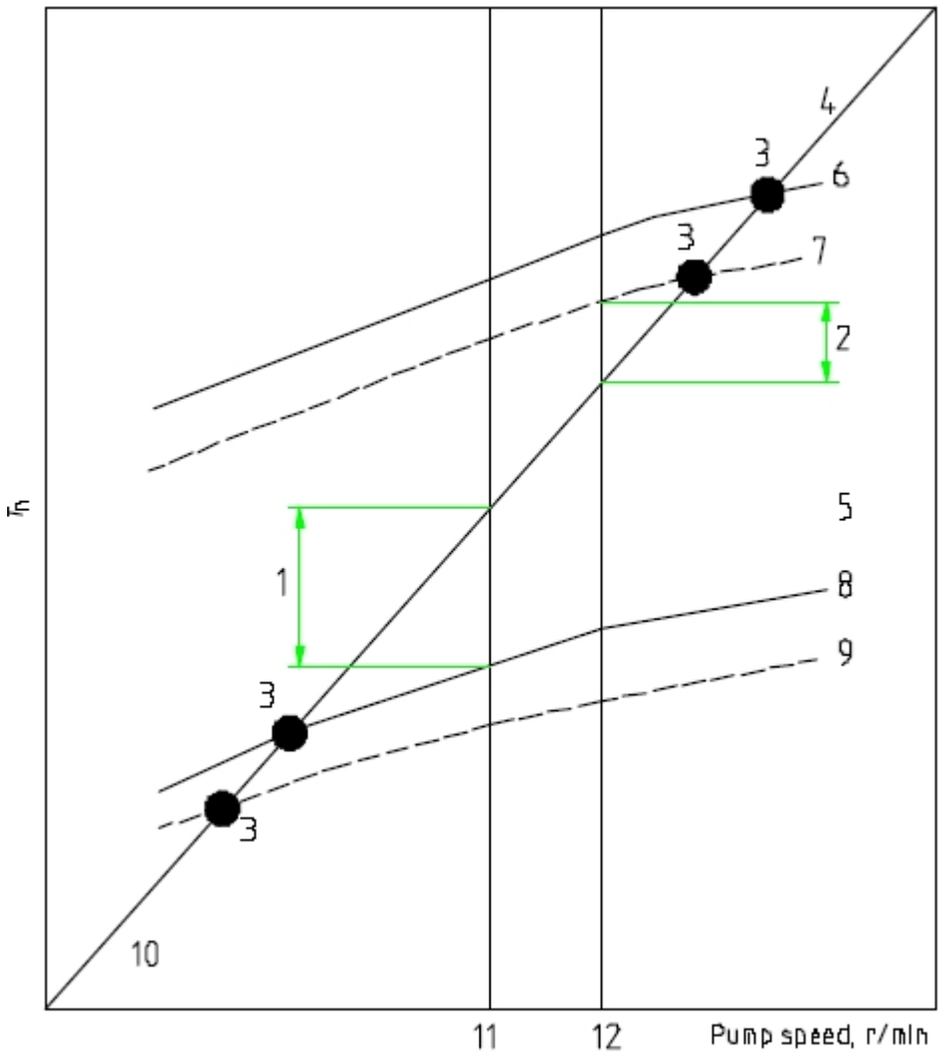

Key
Minimum separation margin, 1st fn
2. Minimum separation margin, 2sn fn
3. critical speeds
4. second flexion
5. First flexion
6. New office
7. settlement 2x
New office
9. settlement 2x
10. Execute line
11. Min.
12. Max.

Figure I.2 - Typical Campbell diagram

I.2 verification Store of the dynamic characteristics of the rotor

I.2.1 If specified, the dynamic characteristics of the rotor will be verified during the store essay. The real response of the rotor to imbalance will be the basis for confirm the validity of the damped lateral analysis. This response is measured either during variable speed operation from nominal speed up to 75% the first critical speed or during deceleration. If the damped response to imbalance was not determined in the analysis of the original rotor (see I.1.4), this response will be determined for a pump with new free spaces manipulation from the waters before proceeding with the store verification. The imbalances of They will be added vectorially in phase with the residual imbalance in places. determined by the manufacturer (usually the coupling and/or thrust collar).

NOTE The main objective of the verification Buy in response to the imbalance it is to verify the existence of a critical speed (vibration peak) within the tolerance of the calculated value, or if the analysis predicts a very critical speed dampened, the absence of a peak vibration within the tolerance of the value calculated. Verification Buying by this method is only possible for the pumps that have bearings and are equipped with pairs of proximity sensors on each bearing.

I.2.2 The magnitude and the location of the imbalance test(s) are determined at Starting from a calibration of the rotor's sensitivity to unbalance. The calibration is carried out by obtaining the vibration orbits at each bearing, it leaked at the rotor speed (1X), during two test runs of the following way:

a) with the rotor incorporated;

b) With added weight imbalance test at 90° from the displacement maximum in executing a file.

The magnitude of the test imbalances must be such that the axis of maximum displacement calculated caused by the total resulting imbalance of (test residual more) is from 150% to 200% of the allowable displacement of the Table 7 or Table 8 on the bearing probes, but it should not exceed eight times. the maximum allowable rotor imbalance.

I.2.3 During the test, the rotor speed, vibration displacement and the corresponding phase angle, it was filtered at rotor speed (1X), it will be measured and will register.

I.2.4 The characteristics of the rotor will be considered, check if the following are met. requirements:

a) observed critical speed (s) (distinct vibration peak and displacement of appropriate phase) within ± 10% of the calculated value (s);

measured vibration amplitudes within 135% of the calculated values.
Highly damped critical speeds cannot be observable, so
thus, the absence of rotor response in the region of a critical speed
highly damped calculated is the verification of the analysis.

I.2.5 If the acceptance criteria indicated in I.2.4 are not met, the stiffness or damping coefficients, or both, that is used in the calculation of the natural frequency will not be able to be adjusted to produce an agreement between the calculated and measured results. The coefficients of a type of element, spaces annular with L / D <0.15, annular spaces L / D > 0.15, the rotor interaction and the bearings will be adjusted with the same correction factor. Once it has been Once an agreement is reached, the same correction factors are applied to the calculation of the natural frequencies of the rotor and damping for the pumped liquid, and the separation margins of the rotor against the reviewed damping factors of new for acceptability.

Of the coefficients used in the lateral analysis of the rotor, the damping ones in annular spaces have the greatest uncertainty and therefore are generally the first to be adjusted. The stiffness coefficients of annular spaces they usually have low uncertainty and therefore should only be adjusted at the base from Orting data sup. Adjustments to the bearing coefficients require specific justification since the typical values are based on empirical data reliable.

I.2.6 alternative methods for verifying the dynamic characteristics of the rotor, for example, variable frequency excitation with the pump at the speed of race to determine the natural frequencies of the rotor, are available. The use of alternative methods and the interpretation of the results must be agreed upon between the buyer and the manufacturer.

I.3 Documentation

The report on a lateral analysis must include the following:

a) the results of the initial evaluation (see 8.2.4.1.1);

b) the fundamental data of the rotor used for the analysis;

c) Campbell diagram (see Figure I.2);

d) solar damping factor against the margin of separation;

e) the form of the mode in the critical speed (s) for which it was determined the damped response to the imbalance (see I.1.4);

f) Verification of the workshop for imbalance (see I.2.3);

g) Summary of the analysis corrections to reach an agreement with the workshop verification (see I.2.5).

Articles and up to g will be provided if the documented activity was required by the analysis or specified by the buyer.

ANNEX J
(NORMATIVE)
PROCEDURE FOR DETERMINING RESIDUAL IMBALANCE

J.1 Scope

This annex describes the procedure to be used to determine residual imbalance. in the rotors of the machine. Although some balancing machines may be configured to read the exact amount of imbalance, the calibration may be in error. The only safe method to determine the residual imbalance is to put it test the rotor with a known amount of imbalance.

J.2 Definition

Residual imbalance refers to the amount of imbalance that remains in a rotor. after equilibrium. Unless otherwise specified, residual imbalance it will be expressed in g-mm or oz-in.

J.3 maximum allowed residual imbalance

J.3.1 The maximum allowable residual imbalance per aircraft is determined in the table 17.

J.3.2 If the actual static load in each magazine is not known, assume that the total of the rotor mass is equally supported by the bearings. For example, a rotor of two bearings with a mass of 2,700 kg (000 pounds 6) is assumed to impose a mass of 1,350 kg (000 pounds 3) on each support.

J.4 Residual check imbalance

J.4.1 general

J.4.1.1 When the balancing readings indicate that the rotor has been balanced Within the specified tolerance, an imbalance check will be carried out. residual before the rotor is removed from the balancer.

J.4.1.2 To check the residual imbalance, a known test mass is connected to the rotor sequentially at 6 (or 12, if specified by the buyer) radially spaced positions, each at the same radius.
The check is performed on each correction plane, and the readings on each Planes are plotted on a graph using the procedure specified in J.4.2.

J.4.2 Procedure

J.4.2.1 Select a test mass and the radius that corresponds to between one and two times the maximum allowed residual imbalance (i.e., if U maximum is 1440mm × g (2 oz-in), the test mass must cause 1440 g mm to 2880 g-mm (2 oz-in a 4 oz-in) of imbalance).

J.4.2.2 From the last known weighted point on each correction plane, mark
the specified number of radial positions (6 or 12) in the same (60° or 30°) increments around the rotor. Add the test mass for the last point heavy known on a plane. If the rotor has been balanced with great precision and the final heavy point cannot be determined, add the test mass for any of the marked radial positions.

J.4.2.3 To verify that an appropriate test mass has been selected,
Operate the balancing machine and take into account the imbalance units. indicated on the meter. If the meter is pinned, an additional test mass must be used. small. If little or nothing from the meter reading results is to be used a larger test mass. Little or nothing from the meter reading generally indicates that the rotor was not properly balanced, the balancing machine is not the sufficiently sensitive, or there is a failure of the equilibrium machine (i.e., to a defective collection). Whatever the error is, it will be corrected before proceeding. to the residual check.

J.4.2.4 Locate the mass in each of the equidistant positions, in turn, and record the amount of imbalance indicated on the meter for each position. Repeat the initial position like a check. All verification will be done with a single one. sensitivity range in the equilibrium machine.

J.4.2.5 Plot the readings in the residual imbalance worksheet and calculate the amount of residual imbalance (see Figure J.1). The maximum reading of the meter is produced when the test mass is added at the heavy point of the rotor, the reading. minimum occurs when the test mass is opposite the heavy point. Therefore Thus, the plotted readings should form an approximate circle (see Figure J.2). A The average of the maximum and minimum readings in meters represents the effect of mass. of the essay. The distance from the center of the circle to the origin of the polar diagram it represents the residual imbalance in that plane.

J.4.2.6 Repeat the steps described in J.4.2.1 through J.4.2.5 for each plane.
equilibrium. If the specified maximum allowable residual imbalance has been exceeded In any plane of equilibrium, the rotor balances with greater precision and checks. Again. If any equilibrium plan is corrected, the verification Residual imbalance is repeated in all planes.

J.4.2.7 for the stack of balanced rotor components, an imbalance check residual takes place after the addition and equilibrium of the first rotor component, and at the end of balancing the entire rotor, such as minimum.

NOTE This ensures that no time is wasted and the rotor components are not subjected to the removal of unnecessary material in an attempt to balance a rotor of multiple components with a faulty balancing machine.

Equipment (rotor) no.: _____

Purchase Order No.: _____

Correction plan (input, side, etc - use sketch): _____

Balancing speed: _____r/min

N = Maximum rotor speed allowed: _____r/min

W = mass of the magazine (the closest to this correction plan): _____kg (lb)

U_{max}maximum allowed residual imbalance

6 350 W/n(4 W/n)

6 350 x _____ kg/_____ r/min; (4 x _____ lb /_____ r/min) _____g□mm (oz-in)

Test imbalance (2 x U_{max}) _____g□mm (oz-in)

R = Radius of mass placement: _____mm (in)

Mass imbalance test = Imbalance test / R

_____ g*mm /_____ mm (_____ oz-in/_____in) _____g (oz)

Información de Conversión: 1 onza = 28,350 g

Datos de Prueba

Sketch Rotor

Position	Test period angular location	machine balance amplitude reading
1		
2		
3		
4		
5		
6		
7		

Test Data - Graphic Analysis

Step 1: the data in the polar graph (Figure J.1 continuation). Scale of the graph for the largest amplitude and the most small will fit accordingly.

Step 2: With a compass, draw the best-fitting circle through the six points and mark the center of this circle.

Step 3: Measure the diameter of the circle in the scale units chosen in step 1 and record. _____ units

Step 4: Record the imbalance trial from above. _____g×mm (oz-in)

Step 5: The double of the test imbalance in step 4 (you can use

twice the actual residual imbalance. _____g×mm (oz-in)

Step 6: Divide the answer in step 5 by the answer in step 3. Scale factor

Now there is a correlation between the units in the polar graph and the actual imbalance.

Figura J.1 - hoja de trabajo desequilibrio

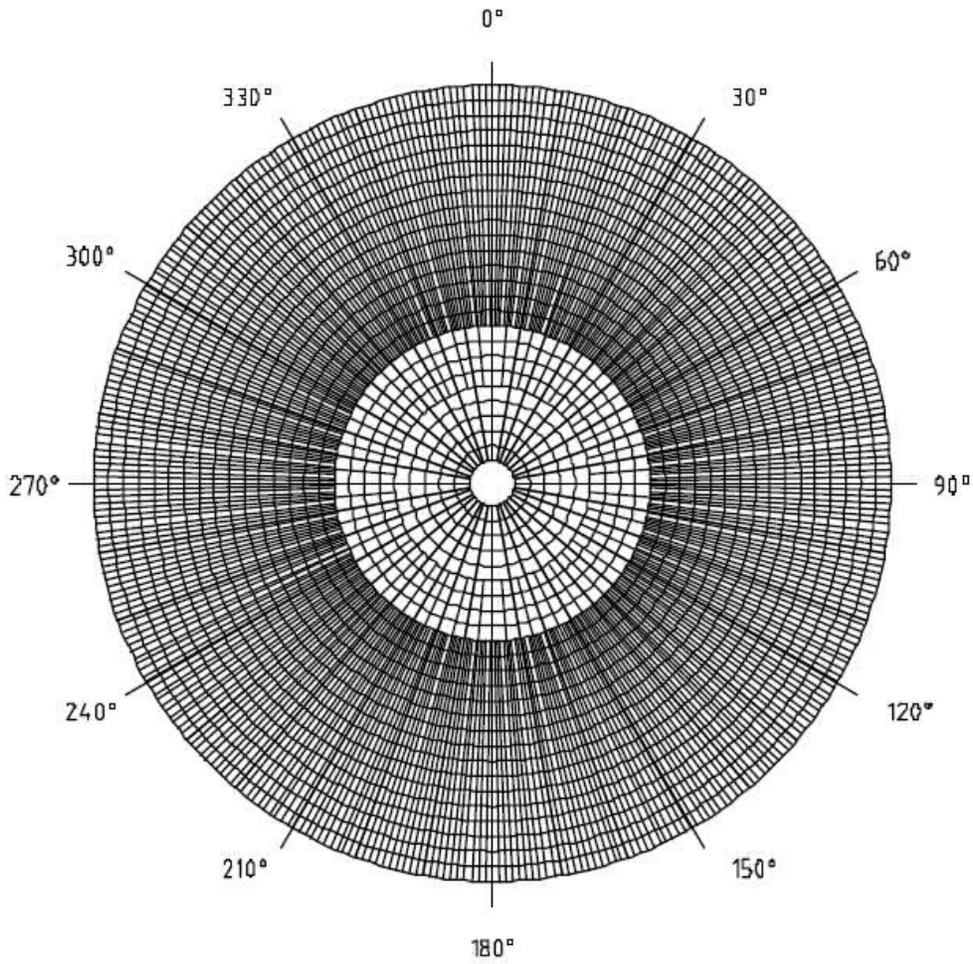

The circle you have drawn must contain the origin of the polar table. If it doesn't, The rotor's residual imbalance exceeds the applied imbalance test.

NOTE: Several possibilities for the drawn circle not including the origin of the table. polar son: operator error during balancing, a defective truck balance machine or by cable, or the balancing machine is not sensitive enough.

If the circle contains the origin of the polar chart, the distance between the origin of the chart and the the center of its circle is the current residual imbalance present in the correction plane Rotor. Measure the distance in units of the selected scale in step 1 and multiply. this number by the scale factor determined in step 6. Distance in units of scale between origin and center of the circle time scale factor is equal to imbalance residual real.

Current registered residual imbalance _____ (g mm) (oz-in)
Allowed register residual imbalance (from Figure J.1) _____ (g mm) (oz-in)
Correction plan _____ for rotor no. _____ (has / does not have) a pass.
By _____date_____

Figure J.1 - residual imbalance worksheet (continuation)

Equipment (rotor) no.: _____C-101_____

Purchase Order No.: _____

Correction plan (entry, side, etc -use sketch): _____A_____

Balancing speed: _____800_____r/min

N = Maximum allowable rotor speed: _____10,000_____r/min

W = mass of the magazine (the closest to this correction plane): _____908_____~~kg~~ (lb)

U_{max}maximum allowed residual imbalance

6 350 W/n(4 W/n)

~~6 350 x _____ kg/_____ rpm;~~ (4 x __908__lb /__10.000_r/min) 0.36 g□mm (oz-in)

Test imbalance (2 x U_{max}) 0.72 g□mm (oz-~~in)~~

R = Radius of the mass placement: ____6,875_____~~mm (~~in)

Mass imbalance test = Imbalance test / R

~~_____g*mm /_____ mm~~ (_0.72 oz-in/_6.875 in) _____0.10_____g~~(~~oz)

Información de Conversión: 1 onza = 28,350 g

Test Data

Rotor Sketch

Position	Test mass angular location	machine balance amplitude reading
1	0°	14.0
2	60°	12.0
3	120°	14.0
4	180°	23.5
5	240°	23.0
6	300°	15.5
7	0°	13.5

Test Data - Graphical Analysis

Step 1: the data in the polar graph (Figure J.1 continuation). Scale of the graph for the largest amplitude and the most small will fit conveniently.

Step 2: Using a compass, draw the best fitting circle through the six points and mark the center of this circle.

Step 3: Measure the diameter of the circle in the scale units chosen in step 1 and record. ____35_____ units

Step 4: Record the imbalance trial from above. 0.72 g×mm (oz-~~in)~~

Step 5: The double of the test imbalance in step 4 (you can use

twice the actual residual imbalance. _____1.44_____~~g×mm~~ (oz-in)

Step 6: Divide the answer in step 5 by the answer in step 3. 0.041 Scale factor

Now there is a correlation between the units in the polar graph and the actual imbalance.

Figure J.2 - Example calculations of residual imbalance

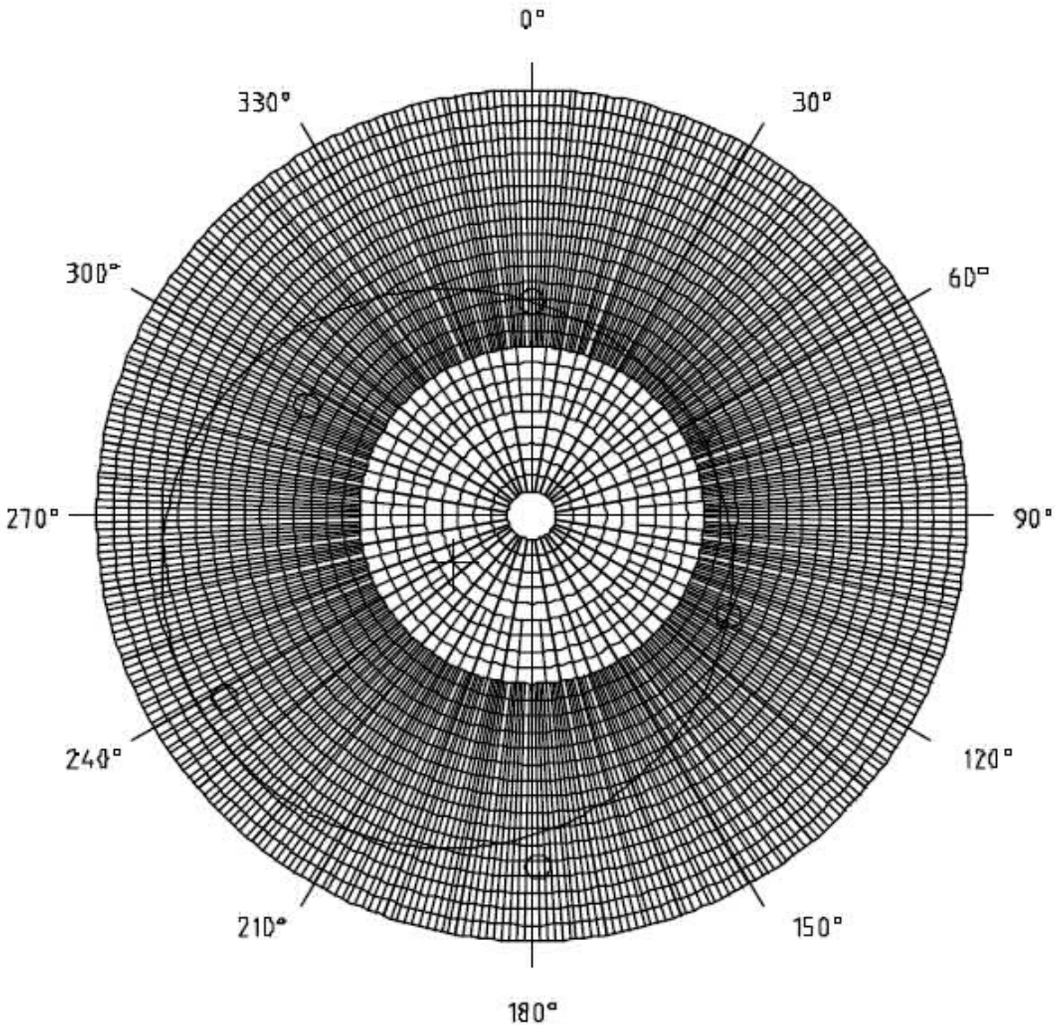

The circle you have drawn must contain the origin of the polar table. If it does not, the imbalance residual of the rotor exceeds the applied unbalance test.

NOTE: Several possibilities for the drawn circle excluding the origin of the polar table are: operator error during balancing, a defective truck machine balance or by cable, or the balancing machine is not sensitive enough.

If the circle contains the origin of the polar chart, the distance between the origin of the chart and the center of its circle is the current residual imbalance present in the rotor correction plane. Measure the distance in units of the selected scale in step 1 and multiply this number by the factor of scale determined in step 6. Distance in scale units between origin and center of the circle time scale factor is equal to actual residual imbalance.

Current register residual imbalance _____6.5 (0.041) = 0.27_____ (g mm) (oz-in)
Permitted residual imbalance register (from Figure J.1) _____0.36_____ (g ~~mm) (oz~~-in)
Correction plan _____ A _____ for rotor no. _____ C-101 _____ (has / does not have) passed.
By _____John Inspector_____date_____2002-04-30_____

Figure J.1 - residual imbalance worksheet (continuation)

ANNEX K
(NORMATIVE)

SEAL OF THE JUMPING CHAMBER ILLUSTRATIONS

The diagrams in this annex illustrate the desired measurements, not the method or the orientation.

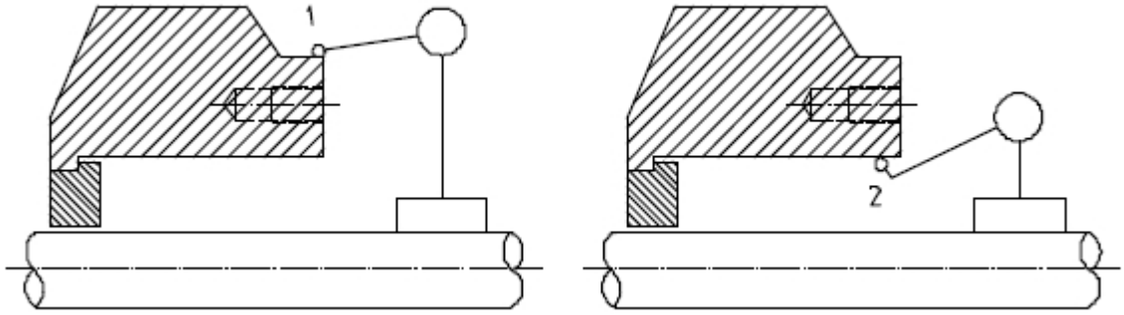

Key
outer diameter
2. inner diameter

Figure K.1 - Concentricity seal chamber (5.8.4)

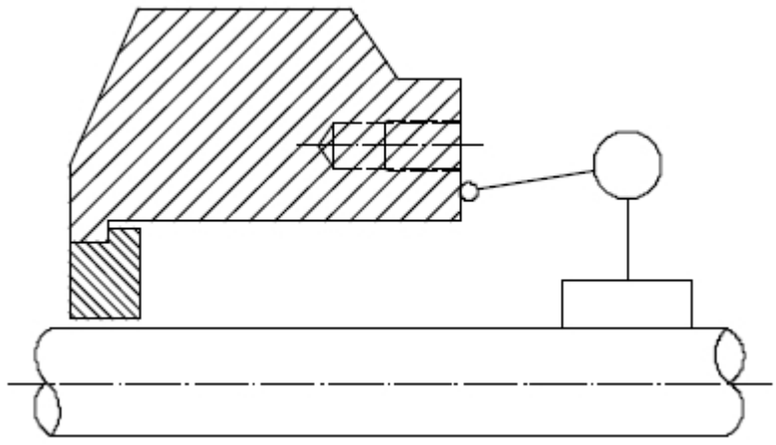

Figure K.2 - Camera seal lateral offset (5.8.5)

ANNEX L
(INFORMATIVE)

DRAWING REQUIREMENTS AND SUPPLIER DATA

L.1 Alcance

This annex consists of a distribution disk (programming), followed by a representative description of the elements that are presented numerically in the programming.

TYPICAL
DRAWING AND VENDOR DATA
REQUIREMENTS

Trabajo No._____Artculo No._____
Orden de compra No._____Fecha_____
Requisición No._____Fecha_____
Consulta No._____Fecha_____
PAGE OF _____ 1___ 2___ BY

For_____
Site_____
Service_____

Review
Unit
No. Required

Proposal[a] The bidder must submit _____ copies of the data for all the elements indicated by an X.

Review[b] The supplier must provide _____ copy and _____ transparencies of the indicated drawings and data.
Final[c] The supplier must provide _____ copy and _____ transparencies of the specified drawings and data.
The provider must supply_____of operation and maintenance.

Final - Received from the seller
Due to supplier[c]

DISTRIBUTION REGISTER Review - returned from the supplier

Review - returned from the supplier

Review - Accounts Receivable from Suppliers[c]

Descripción

			Pumps					
			1- Certificate of dimensional sketch drawing					
			2-Cross-sectional drawings and materials list.					
			3-Axis drawing of the seal and the lists of the materials.					
			4-Flat coupling axis mounting and bill of materials.					
			5-Schematic of primary and auxiliary leveled pipes and material lists.					
			6-Cooling or heating of scheme and list of materials					
			7-Schematic of lubricating oil and the lists of materials.					
			8-Flat arrangement lubricating oil system.					
			9-Plans of the motor oil components.					
			10-Electrical schemes and instruments, wiring diagrams, and materials list					
			11-Electrical and flat layout instrument and the connection list					
			12-yield curves					
			13-Vibration analysis data					
			14-Analysis of the damped oscillatory response					

			15-Critical lateral speed analysis					
			16-Torsional critical speed analysis.					
			17-Certified hydrostatic test data					
			18-material certifications					
			19 progress reports					
			20 welding procedures					
			21-performance test data					
			22-Tests of the data and optional reports					
			23-certified data rotor balance for multistage pumps.					
			24-Check residual imbalance					
			25-Machanical and electrical eccentricity of the rotor for contactless vibration probe pumps.					
			26- Sheets applicable to data proposals, purchasing, and construction					
			27-Noise data sheets					
			28- like built spaces					
			29-Installation, operation, and maintenance manuals					
			30-Recommendations for spare parts and price list					
			31-Preservation, packaging, and shipping procedures					
			32-Material Safety Data Sheets					

TYPICAL
DRAWING AND VENDOR DATA
REQUIREMENTS

Trabajo No._____Artculo No._____
Purchase order No._____ Date_____
Requisición No._____Fecha_____
Consulta No._____Fecha_____
PAGE OF _____ 2___ 2___ BY

For_____
Site
Servicio_____

Review
Unit
No. Required

Proposal[a] The bidder must present _____ copies of the data for all the items indicated by an X.

Review[b] Supplier must provide _____ copy and _____ transparencies of the indicated drawings and data.
Final[c] Supplier must provide _____ copy and _____ transparencies of the indicated drawings and data.
The supplier must provide_____operating and maintenance.

Final - Received from the seller
Due to the provider[c]

DISTRIBUTION REGISTER Review - returned from the supplier

Review - returned from the supplier

Review - Accounts receivable from suppliers[c]

			Description					
			Bombs					
			33-Certificate drawing of dimensional scheme (for magnetic drive pumps only)					
			34-Cross-sectional drawing and list of materials					
			35- Sheets applicable to data proposals, purchase, and construction					
			36-Noise data sheets					
			37-performance data					
			38-Certified drawings of auxiliary systems					
			39-installation operation and maintenance manuals					
			40-Recommendations for spare parts and price list					
			41-Material Safety Data Sheets					

The proposal drawings and data do not need to be certified or constructed. Typical data must be clearly identified as such.
For single-stage units. These elements normally provide only in the instruction manuals.
These articles are normally applicable to multi-stage units.

NOTES
1) Send all the plans and data of _____
_____
_
2) All drawings and data show projects, consignment, purchase order, and the number of elements, in addition to the location of the plant and the unit. In addition to the specified copies previously, a set of drawings / instructions necessary for the installation in the field were will transmit with the shipment.

Nomenclature:
_____Several weeks before the boarding.
_____F-number of weeks after the firm order.
_____D-number of weeks after the receipt of the approved plans:
Seller _____
Fecha _____ Proveedor Referencia _____
Company _____

L.2 Description

L.2.1 Pumps

1) Limited certificate of the scheme including:

a) Size, classification and location of all buyer connections; sheets of data applicable to proposals, purchasing, and construction.

b) general weights and approximate handling;

c) Maximum dimensions, and maintenance and authorizations of dismantling

d) height of the axis of the axis;

e) The dimensions of the base plates (if equipped) complete with diameters, number and location of the threaded holes in the body, and the thicknesses of the sections through which the bolts must pass;

f) injection details;

g) Forces and moments for suction and discharge mouths;

h) Center of gravity and lift points;

i) the final separation of the axis and data alignment;

j) Sense of rotation;

k) Winterization, tropicalization, and/or noise attenuation data, if applicable. necessary.

2) the cross-sectional plans and materials list

3) Drawing axis of the seal and the list of materials

4) Flat coupling axis for assembly and materials list, including the tolerances for misalignment and the style of coupling protection

5) primary and auxiliary sealing scheme, and the list of materials including the seal liquid, fluid flows, pressure, piping and valve sizes, instrumentation and hole sizes

6) cooling or heating diagram and list of materials, including cooling or heating of the material, fluid flows, pressure, pipes and valve sizes, instrumentation and hole sizes

7) schematic lubricant of petroleum and the list of materials included next:

a) the oil flows, temperatures, and pressures at each point of use;

b) control, alarm and trip settings (recommended pressure and temperatures);

c) the total head loads;

d) the requirements for public services, including electricity, water, and air;

e) of pipes, valves, and the size hole;

f) instruments, safety devices, control systems and diagrams of wiring.

8) Flat lubricating oil system layout including size, number and location of all buyer connections

9) Flat lubricants of petroleum components and the data they include following:

a) The pumps and the conductors;

b) Cooler, filters, and tank;

c) Instrumentation;

d) Ready parts and recommendations for parts.

10) Electrical and instrumentation schematics, wiring diagrams, and list of materials that include the following:

a) Vibration alarm and stop limits;

b) Bearing temperature alarm and stop limits;

c) Oil temperature alarm and stop limits;

d) Driver.

11) electrical and instrumentation layout and the connection list.

12) The yield curves.

13) The vibration analysis data.

14) damped analysis of the unbalanced response.
15) Critical lateral velocity analysis - The required number of analysis reports lateral critics, at most 3 months after the order date. The reports They must adhere to the provisions I.3.1.

16) Critical torsional speed analysis - The necessary number of analysis reports twisting critics, no later than 3 months after the order date. The Reports must comply with provisions 5.9.2.6.

17) Certified hydrostatic test data.

18) Material certifications - The physical and chemical data of the seller from the reports of the mill (or certification) of pressure parts, impellers, and shafts.

19) Progress reports detailing the cause of any delays - The reports
They will include engineering, purchasing, manufacturing, and testing programs for all the main components. Planned and actual dates and the percentage completed are they will indicate for each milestone in the schedule.

20) The welding procedures

21) Functionality test of the certified data store test records performance. A record of workshop test data (which the provider must) maintain for at least 20 years after the shipping date). The supplier You must present certified copies of the evidence data to the buyer before the shipment.

Optional tests data and reports - optional tests of data and the reports includes the NPSHR test, complete unit test, sound level test, testing of auxiliary equipment, having resonance testing of the dwelling, and others mutually agreed tests between the buyer and the seller.

23) Certified rotor balance data for multi-stage pumps.

Residual imbalance verification.

25) mechanical and electrical eccentricity of the rotor for pumps designed to use non-contact vibration probes.

Data sheets applicable to purchase proposals and according to the work.

27) the noise data sheets.

28) authorizations according to the work.

29) The instruction manuals that describe the installation procedures, operation and maintenance. Each manual must include the following sections:

Section 1-Installation:

a) Storage.

b) Foundation.

c) Injection.

d) Adjustment equipment, rigging procedures, the weights of the components, and the diagram drawing.

e) Alignment.

f) pipe recommendations.

g) the schematic drawing composed of train pump / driver, including locations of the anchor bolts.

h) Dismantling authorizations.

Section 2-Operation:

a) Start-up including tests and verifications before the start-up

b) the routine operational procedures

c) the recommendations for motor oil

Section 3-Disassembly and Assembly:

a) of the rotor in the pump housing

b) Rolling bearings diary

c) The thrust bearings (including the dispatch and preloading of the bearings antifriction

d) Stamps

e) the push collars, if applicable

f) allowable wear of operational clearances

g) The adjustments and tolerances for reconstruction

h) the procedures and intervals for routine maintenance

Section 4 - performance curves including differential load, efficiency, NPSHR water, and the braking power compared to the flow rate of all the conditions specified in the data sheets.

Section 5-Vibration Data

a) The vibration analysis data

b) Analysis of the critical lateral velocity

c) Analysis of the critical torsional speed.

Section 6 - Constructed data:

a) How the data sheets are built

b) As built spaces

c) Rotor balance data for multistage pumps

d) the noise data sheets

e) Performance data

Section 7 - Drawing and required data:

a) Dimensional certificate, detailed drawing, and connection list

b) Cross-sectional drawing and materials list

c) Axial drawing of the seal and the list of materials

d) flat lubricant oil disposal plan and the connection list

e) drawings of lubricant oil of the components and data and materials lists.

Schemes.

f) electrical and instrumentation, wiring diagrams, and bill of materials

g) electrical and instrumentation layout plan and the connection list

h) Flat mounting coupling and bill of materials

I) Schematic of primary and auxiliary seal, and the list of materials.

j) the main pipeline and auxiliary seals, instrumentation, arrangement, and the list of connections.

k) cooling and heating system diagram and material list

l) cooling or heating of pipes, instrumentation system and list of connections

30) Recommendations for spare parts and price list.

31) Preservation, packaging, and shipping.

32) Material Safety Data Sheets.

L.2.2 Motor

1) Dimensional certificate drawing of the schematic for the engine and all auxiliary equipment including the following:

a) Size, location, and purpose of all buyer connections, including pipes, instrumentation and any production piping.

b) ASME Assessment and orientation of flanges.

c) The size and location of the anchor bolt holes and thicknesses of the sections through which the bolts must pass.

d) the total weight of each equipment (motor and auxiliary equipment), in addition to diagrams of load, the heaviest weight, and the name of the piece.

e) The total dimensions and all horizontal and vertical free spaces necessary for disassembly and the approximate location of lifting lugs.

f) height of the axis of the axis.

g) Dimensions of the shaft end, in addition to tolerances for the coupling.

h) Direction of rotation.

2) Cross sectional drawing and list of materials including the axial rotor float.

3) the sheets corresponding to the purchase proposals and as-built data.

4) the noise data sheets.

5) The performance data includes the following:

a) For induction motors of 150 kW (200 hp) and smaller:

i) Efficiency and power factor at one and a half, three quarters, and full load.

ii) the speed-flow curves.

b) For induction motors larger than 150 kW (200 HP) and bigger, the certified test reports for all test executions and the curves of performance in the following manner:

the current duration heating curve.

ii) the speed-par curves at 70, 80, 90, and 100 percent of the tension nominal.

iii) the curves of the efficiency factor and the power from 0 to the nominal service factor.

iv) actual against the load curves from 0 to the nominal service factor.

v) facing the current speed curves from 0 to 100 percent of speed nominal.

6) the certified plans of auxiliary systems, including wiring diagrams for each auxiliary supply system. The plans must clearly indicate the scope of the system to be supplied by the manufacturer and the degree to be supplied by others.

7) instruction manuals of the engine that describe the procedures for installation, operation, and maintenance. Each manual must include the following sections:

Section 1-Installation:

a) Storage.

b) Engine adjustment, rigging procedures, component weights, and

the elevation diagram.

c) The pipes and duct recommendations.

d) the drawing of a schematic composed of a motor including the location of holes

the anchor bolts.

e) disassembly clearances.

Section 2-Operation:

a) Startup including the check before starting.

b) the normal shutdown.

c) Operating limits, including the number of successive starts.

d) recommendations on lubrication oil.

Section 3 - Disassembly and assembly instructions

a) Motor rotor.

b) the bearings.

c) Stamps.

d) the routine maintenance procedures and intervals.

Section 4 - The performance data required by Article 37.

Section 5-data sheets

a) Built data sheets

b) the noise data sheets.

Section 6-Drawing and data requirements

a) the dimensional layout drawing Certified for the engine and all auxiliary equipment with the list of connections
b) Cross sectional drawing and list of materials

40) Recommendations for spare parts and price list

41) In the safety data sheets for materials

ANNEX M
(INFORMATION)

TEST DATA SUMMARY

SUMMARY OF DATA ANALYSIS	
client	Curve No.
Purchase	Test date
Order to purchase No.:	
Article No:	Certificate by

Serial number of the bomb	(Responsible seller)
Size and type	Witness by:
No. Of stages	Purchasing Representative

Global results of the pump (Table 14)				
	Rating	Tested	Actual deviation + / -%	Tolerance Acceptance + / -%
Flow				
Load				
Power				
NPSHR 3%				
Closing load				
Speed, r / min				

Pump construction data			
Stage 1		Series of stages	
Impeller diameter	mm (in)	Impeller Diameter	mm (in)
Driver Model No.		Driver model No.	
Number of palettes		Number of pallets	
Volute/diffuser model No.		Volute/diffuser model No.	
Separation of the tip of the leaf (5.1.17)	%	Tip separation of the leaf (5.1.17)	%

Mechanical performance						
Maximum vibration levels recorded in a specified flow region (5.9.3)						
	nominal flow		Operational region preferential		Operating region admissible	
	Test	Specified	Test	Specified	Test	Specified
Speed accommodation Drive End: General/filtered						
Non-Drive End: General/filtered						
Displacement of the axis: Drive end: General/filtered						
Non-Drive End: General/filtered						

Having Temperatures °C (°F) (5.10.2.4, 8.2.5.2.4 and 8.2.5.3)			
Pressure lubrication systems Oil or lubrication splash ring			
Ambient temperature		Ambient temperature	
Oil temperature. Increase		Oil temperature. Increase	
Return temperature of the oil		Oil temperature from Carter	
Maximum temperature of metal bearing			
Final Transmission Diary			
Does not broadcast daily			

Thrust bearing		
This mechanical performance summary is to record the test levels for each region. operation in relation to the specified values. It is not intended to replace data records from the store's trials. The units of measurement will be mm/s (in/s) effective speed, mm (mils) peak/peak of displacement and °C (°F) for the temperature.		

Figure M.1 - summarized form of the test data

No. Bomb serial_____ Pumped liquid Size and type_____ Relative density_____ No. of steps_____ Temperatura_____°c Speed r/min_____ Kinematic viscosity _____ mm^2/s Driver No._____ Eye area of the impeller_____mm^2		Curve No. Nominal point Flow m^3/h= 180.0 Load m= 94 NPSHR m= 6.3 Potencia kW= 55.9 Eficiencia calculada %= 83,2 Ref.

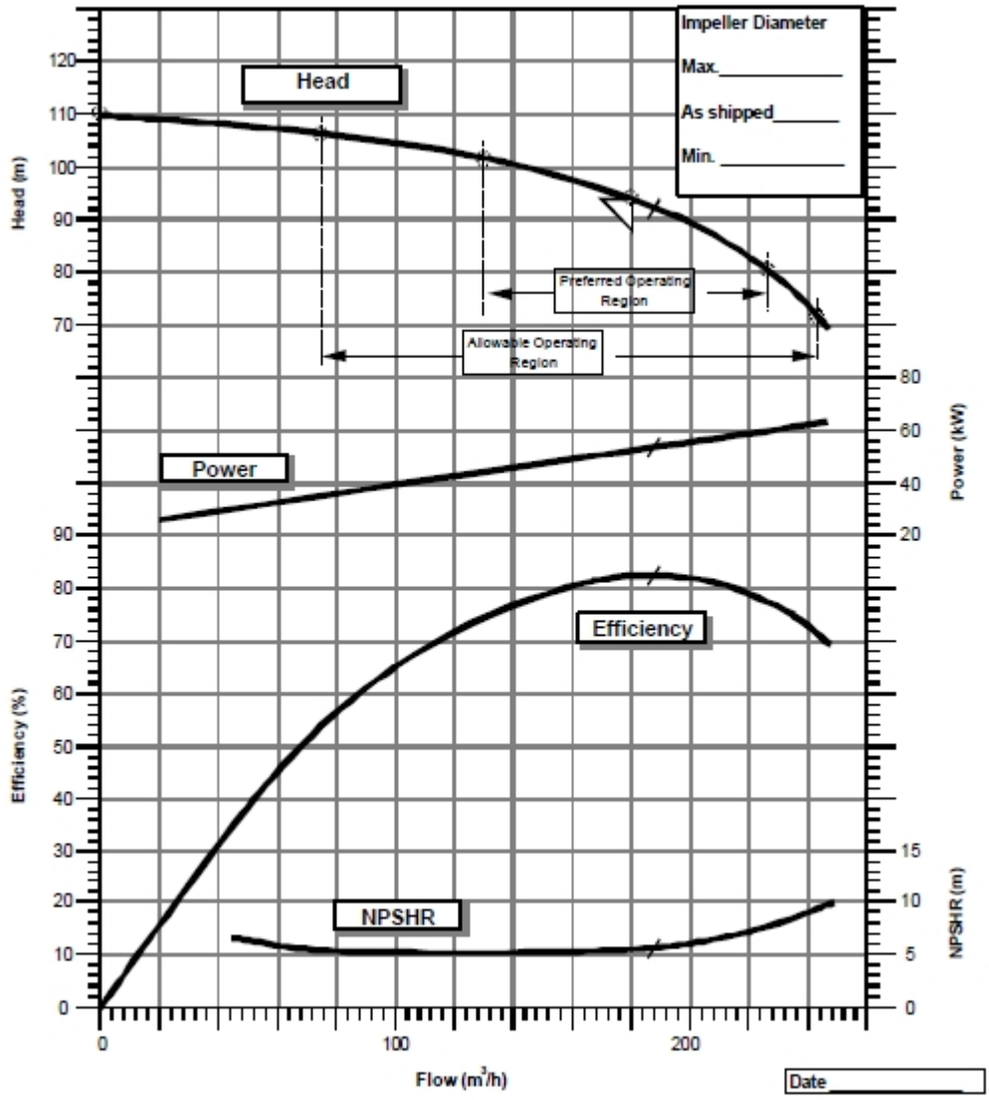

NOTE The scale values, flow, head, NPSHR, power, efficiency only for illustration.

Figure M.2 - Test curve format - ISO style.

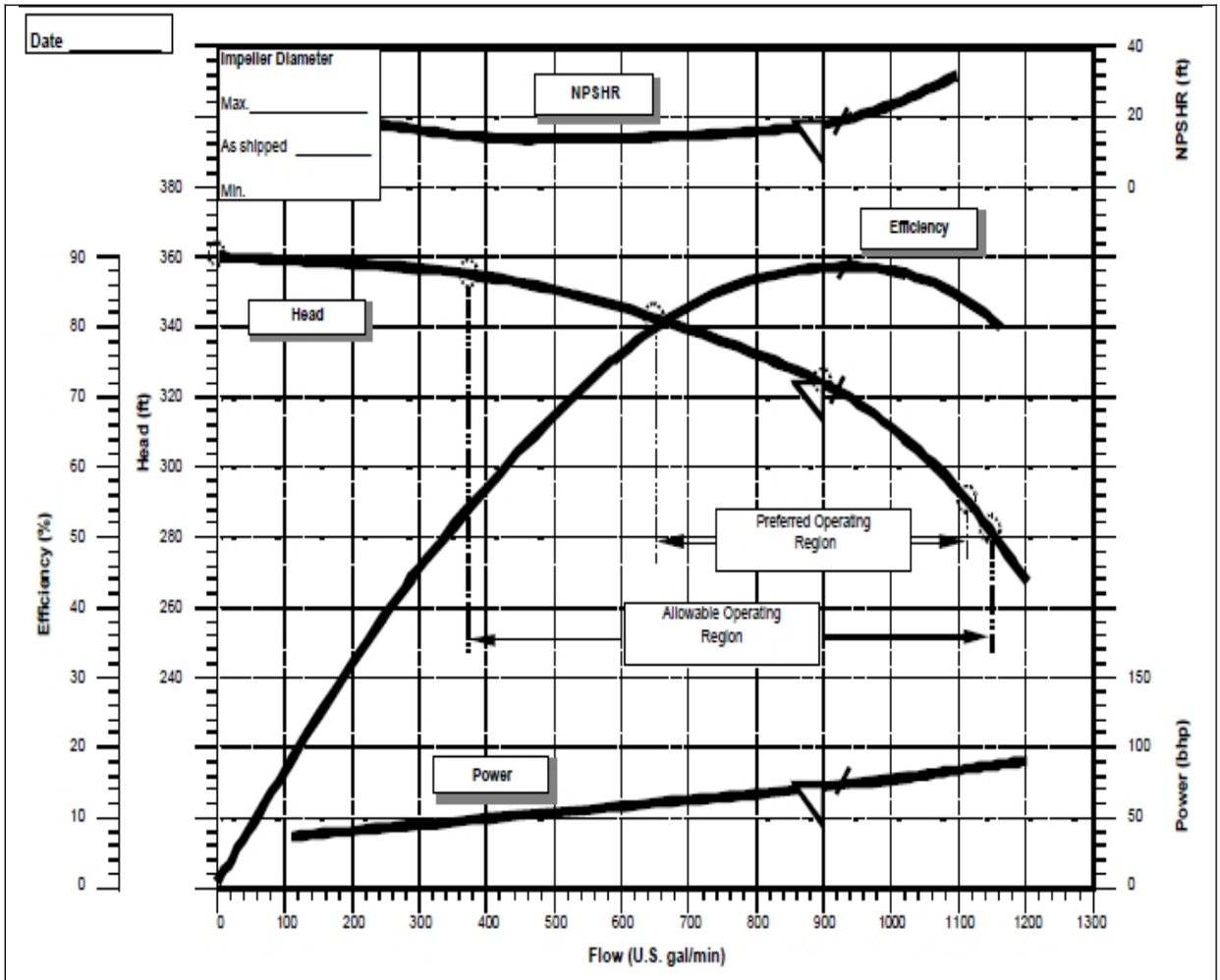

No. Pump serial number_____ Size and type_____ Number of stages_____ Speed r/min_____ Impulsor No._____	Pumped liquid Relative density_____ Temperatura_____°c Kinematic viscosity_____mm²/s Area of the eye of impeller_____mm²	Nominal point Flow U.S. gal/min= 900 Load ft = 325 NPSHR ft = 17.1 BHP power = 72.4 Calculated efficiency % = 88.3 Ref.

NOTE The scale values, flow, head, NPSHR, power, efficiency only for illustration.

Figure M.3 - Curve format test - U.S. style

ANNEX N

(INFORMATIVE)
DATA SHEETS OF THE PUMP

PAGE 1 OF

CENTRIFUGAL PUMP
PROCESS DATA SHEET
SI UNITS

JOB NO. ITEM NO.(S)
REQ /SPEC NO. /
PURCH ORDER NO. DATE
INQUIRY NO BY

1 APPLICABLE TO: ○ PROPOSALS ○ PURCHASE ☐ AS BUILT
2 FOR UNIT
3 SITE SERVICE
5 NOTES: INFORMATION BELOW TO BE COMPLETED ○ BY PURCHASER ☐ BY MANUFACTURER ☐ BY MANUFACTURER OR PURCHASER
6 ○ DATA SHEETS

7	ITEM NO.	ATTACHED	ITEM NO.	ATTACHED	ITEM NO.	ATTACHED
8 PUMP		○		○		○
9 MOTOR		○		○		○
10 GEAR		○		○		○
11 TURBINE		○		○		○

REVISIONS

NO	DATE	BY
1		
2		
3		
4		
5		

12 APPLICABLE OVERLAY STANDARD (S):

13 ○ OPERATING CONDITIONS (5.1.3)
14 FLOW, NORMAL (m^3/h) RATED (m^3/h)
15 OTHER
17 SUCTION PRESSURE MAX./RATED / (bar)
18 DISCHARGE PRESSURE (bar)
19 DIFFERENTIAL PRESSURE (bar)
20 DIFF. HEAD (m) NPSHA (m)
21 PROCESS VARIATIONS (5.1.4)
22 STARTING CONDITIONS (5.1.4)
23 SERVICE: ○ CONT. ○ INTERMITTENT (STARTS/DAY)
24 ○ PARALLEL OPERATION REQ'D (5.1.13)

○ LIQUID (5.1.3)
LIQUID TYPE OR NAME
○ HAZARDOUS ○ FLAMMABLE ○ (5.1.5)

	MIN.	NORMAL	MAX.
PUMPING TEMP (°C)			
VAPOUR PRESS. (bar)			
RELATIVE DENSITY (SG):			
VISCOSITY (mPa.s)			

SPECIFIC HEAT, Cp (kJ/kg.K)
○ CHLORIDE CONCENTRATION (6.5.2.4) (mg/kg)
○ H_2S CONCENTRATION (mol fraction) WET (5.12.1.12c)
CORROSIVE /EROSIVE AGENT (5.12.1.9)

25 ○ SITE DATA (5.1.3)
27 LOCATION: (5.1.30)
28 ○ INDOOR ○ HEATED ○ OUTDOOR ○ UNHEATED
29 ○ ELECTRICAL AREA CLASSIFICATION (5.1.24 /6.1.4)
30 CL GR DIV
31 ○ WINTERIZATION REQ'D ○ TROPICALIZATION REQ'D.
32 SITE DATA (5.1.30)
33 ○ ALTITUDE (m) BAROMETER (bar)
34 ○ RANGE OF AMBIENT TEMPS: MIN./MAX. / (°C)
35 ○ RELATIVE HUMIDITY: MIN /MAX / (%)
36 UNUSUAL CONDITIONS: (5.1.30) ○ DUST ○ FUMES
37 ○ OTHER

MATERIALS (5.12.1.1)
○ ANNEX H CLASS (5.12.1.1)
○ MIN DESIGN METAL TEMP (5.12.4.1) (°C)
○ REDUCED HARDNESS MATERIALS REQ'D. (5.12.1.12)
☐ BARREL/CASE IMPELLER
☐ CASE/IMPELLER WEAR RINGS
☐ SHAFT
☐ DIFFUSERS

○ DRIVER TYPE
41 ○ INDUCTION MOTOR ○ STEAM TURBINE ○ GEAR
42 ○ OTHER ○
43

44 ○ MOTOR DRIVER (6.1.1 /6.1.4)
45 ○ MANUFACTURER
46 ☐ (kW) ☐ (rpm in)
47 ☐ FRAME ○ ENCLOSURE
48 ○ HORIZONTAL ○ VERTICAL ○ SERVICE FACTOR
49 ○ VOLTS/PHASE/HERTZ / /
50 ○ TYPE
51 ○ MINIMUM STARTING VOLTAGE (6.1.5)
52 ○ INSULATION ○ TEMP. RISE
53 ○ FULL LOAD AMPS
54 ○ LOCKED ROTOR AMPS
55 ○ STARTING METHOD
56 ○ LUBE
58 BEARINGS (TYPE/NUMBER):
59 ☐ RADIAL /
60 ☐ THRUST /
61 ☐ VERTICAL THRUST CAPACITY
62 UP (N) DOWN (N)

○ PERFORMANCE
PROPOSAL CURVE NO. ☐ rpm in
☐ IMPELLER DIA. RATED MAX. MIN. (mm)
☐ IMPELLER TYPE
☐ RATED POWER (kW) EFFICIENCY (%)
☐ MINIMUM CONTINUOUS FLOW:
THERMAL (m^3/h) STABLE (m^3/h)
☐ PREFERRED OPER. REGION TO (m^3/h)
☐ ALLOWABLE OPER. REGION TO (m^3/h)
☐ MAX HEAD @ RATED IMPELLER (m)
☐ MAX POWER @ RATED IMPELLER (kW)
☐ NPSHR AT RATED FLOW (m) (5.1.10)
☐ MAX. SUCTION SPECIFIC SPEED: (5.1.11)
☐ MAX. SOUND PRESS. LEVEL REQ'D (dBA) (5.1.16)
☐ EST MAX SOUND PRESS. LEVEL (dBA) (5.1.16)
☐ EST MAX SOUND POWER LEVEL (dBA) (5.1.16)

○ UTILITY CONDITIONS (6.1.3)

ELECTRICITY	VOLTAGE	PHASE	HERTZ
DRIVERS			
HEATING			

SYSTEM VOLTAGE DIP ○ 80% ○ OTHER (6.1.5)

STEAM	MAX. PRESS.	MAX. TEMP.	MIN. PRESS.	MIN. TEMP.
DRIVERS				
HEATING				

COOLING WATER: (5.1.19) SOURCE
SUPPLY TEMP. (°C) MAX. RETURN TEMP. (°C)
NORM. PRESS. (bar) DESIGN PRESS. (bar)
MIN. RET. PRESS. (bar) MAX. ALLOW. D.P. (bar)
CHLORIDE CONCENTRATION: (mg/kg)

Figure No. 1 - Technical data sheets of the pump - SI units

CENTRIFUGAL PUMP
PROCESS DATA SHEET
SI UNITS

PAGE 2 OF

JOB NO. ITEM NO.(S)
REQ /SPEC NO. /
PURCH ORDER NO. DATE
INQUIRY NO BY

Figure No. 1 - Technical data sheets of the pump - SI units (continued)

CENTRIFUGAL PUMP DATA SHEET
SINGLE STAGE OVERHUNG (TYPE OH)
SI UNITS

PAGE 3 OF

JOB NO. ITEM NO.(S)
REQ /SPEC NO. /
PURCH ORDER NO. DATE
INQUIRY NO BY

CONSTRUCTION

ROTATION: (VIEWED FROM COUPLING END) ☐ CW ☐ CCW
PUMP TYPE: (4.1)
☐ OH2 ☐ OH3 ☐ OH6 ☐ OTHER
CASING MOUNTING:
☐ CENTERLINE ☐ IN-LINE ☐ OTHER
CASING TYPE:
☐ SINGLE VOLUTE ☐ MULTIPLE VOLUTE ☐ DIFFUSER
CASE PRESSURE RATING:
○ OH6 PUMP SUCTION REGION DESIGNED FOR MAWP (5.3.6)
☐ MAX ALLOWABLE WORKING PRESSURE (bar)
@ (°C)
☐ HYDROTEST PRESSURE (bar)
☐ NOZZLE CONNECTIONS: (5.4.2)

	SIZE	FLANGE RATING	FACE	POSITION
SUCTION				
DISCHARGE				

PRESSURE CASING AUX.CONNECTIONS: (5.4.3)

	NO.	SIZE (DN)	TYPE
☐ DRAIN			
☐ VENT			
☐ WARM-UP			

☐ MACHINED AND STUDDED CONNECTIONS (5.4.3.8)
○ CYLINDRICAL THREADS REQUIRED (5.4.3.3)
ROTOR.
○ COMPONENT BALANCE TO ISO 1940 G1.0 (5.9.4.4)
COUPLINGS.(5.2.2)
○ MANUFACTURER ☐ MODEL
☐ RATING (kW per100 rpm)
☐ SPACER LENGTH (mm) ☐ SERVICE FACT.
○ COUPLING BALANCED TO ISO 1940-1 G6.3 (5.2.3)
○ COUPLING WITH PROPRIETARY CLAMPING DEVICE (5.2.11)
○ COUPLING PER ISO 14691 (5.2.4)
○ COUPLING PER ISO 10441 (5.2.4)
○ COUPLING PER API671 (5.2.4) ○ ASME B15.1
○ NON SPARK COUPLING GUARD (5.2.14c)
○ COUPLING GUARD STANDARD PER (5.2.14a)
BASEPLATES.
☐ API BASEPLATE NUMBER (ANNEX D)
○ NON-GROUT CONSTRUCTION (5.3.13)
○ OTHER
MECHANICAL SEAL.(5.8.1)
○ SEE ATTACHED ISO 21049/API682 DATA SHEET

SURFACE PREPARATION AND PAINT

○ MANUFACTURER'S STANDARD ○ OTHER (SEE BELOW)
○ SPECIFICATION NO.
PUMP:
○ PRIMER
○ FINISH COAT
BASEPLATE: (5.3.17)
○ PRIMER
○ FINISH COAT
○ DETAILS OF LIFTING DEVICES (5.3.20)
SHIPMENT: (7.4.1)
○ DOMESTIC ○ EXPORT ○ EXPORT BOXING REQUIRED
○ OUTDOOR STORAGE MORE THAN 6 MONTHS
SPARE ROTOR ASSEMBLY PACKAGED FOR:
○ HORIZONTAL STORAGE ○ VERTICAL STORAGE
○ TYPE OF SHIPPING PREPARATION

HEATING AND COOLING

○ HEATING JACKET REQ'D. (5.8.9)
☐ COOLING REQ'D.
☐ COOLING WATER PIPING PLAN (5.5.3.1)
C.W. PIPING:
☐ PIPE ☐ TUBING; FITTINGS
C.W. PIPING MATERIALS:
☐ S.STEEL ☐ C.STEEL ☐ GALVANIZED
COOLING WATER REQUIREMENTS:
☐ BEARING HOUSING (m^3/h)
HEAT EXCHANGER (m^3/h)
TOTAL COOLING WATER (m^3/h)
HEAT MEDIUM: ○ STEAM ○ OTHER
HEATING PIPING: ○ TUBING ○ PIPE

BEARINGS AND LUBRICATION

BEARING (TYPE/NUMBER) (5.10.1):
☐ RADIAL /
☐ THRUST /
LUBRICATION (5.11.3, 5.11.4):
☐ GREASE ☐ OIL
○ PURGE OILMIST ○ PURE OILMIST
○ CONSTANT LEVEL OILER PREFERENCE (5.10.2.2):
☐ OIL VISC. ISO GRADE

INSTRUMENTATION

○ ACCELEROMETER (5.4.2.1)
○ PROVISION FOR MOUNTING ONLY (5.10.2.11)
○ FLAT SURFACE REQ'D (5.10.2.12)
○ TEMP.GAUGES (WITH THERMOWELLS) (8.1.3.6)
○ PRESSURE GAUGE TYPE

REMARKS:

☐ MASSES

MASS OF PUMP (kg)
MASS OF BASEPLATE (kg)
MASS OF DRIVER (kg)
TOTAL MASS (kg)

Figure N.1 - Technical sheets of the pump - SI units (continuation)

CENTRIFUGAL PUMP DATA SHEET
SINGLE STAGE OVERHUNG (TYPE OH)
SI UNITS

PAGE 4 OF ____

JOB NO. ____ ITEM NO. (S) ____
REQ /SPEC NO. ____ / ____
PURCH ORDER NO. ____ DATE ____
INQUIRY NO ____ BY ____

1 SPARE PARTS (TABLE 10)
2 ○ START-UP ○ NORMAL MAINTENANCE
○ ____
○ OTHER PURCHASER REQUIREMENTS
○ COORDINATION MEETING REQUIRED (9.1.3)
○ MAXIMUM DISCHARGE PRESSURE TO INCLUDE (5.3.2)
○ MAX RELATIVE DENSITY
○ MAX DIA. IMPELLERS AND/OR NO OF STAGES
○ OPERATION TO TRIP SPEED
○ OH3 BEARING HS6 LIFTER (8.1.2.6)
○ CONNECTION DESIGN APPROVAL (5.12.3.4)
☒ TORSIONAL ANALYSIS REQUIRED (5.9.2.1)
○ TORSIONAL ANALYSIS REPORT (5.9.2.6)
○ PROGRESS REPORTS (9.3.3)
○ OUTLINE OF PROCEDURES FOR OPTIONAL TESTS (9.2.5)
○ ADDITIONAL DATA REQUIRING 20 YEARS RETENTION (7.2.1.1f)
PIPING AND APPURTENANCES
MANIFOLD PIPING TO SINGLE CONNECTION (6.5.1.6)
☒ VENT ☒ DRAIN ☒ COOLING WATER
☒ MOUNT SEAL RESERVOIR OFF BASEPLATE (6.5.1.4)
☒ FLANGES REQ'D IN PLACE OF SOCKET WELD UNIONS (6.5.2.8)
☒ INSTALLATION LIST IN PROPOSAL (9.2.3L)
CONNECTION BOLTING
○ PTFE COATING ○ ASTM A153 GALVANIZED
○ PAINTED ○ SS
QA INSPECTION AND TESTING
○ SHOP INSPECTION (7.1.4)
○ PERFORMANCE CURVE APPROVAL
☒ TEST WITH SUBSTITUTE SEAL (7.3.3.2b)
○ MATERIAL CERTIFICATION REQUIRED (5.12.1.8)
○ CASING ○ IMPELLER ○ SHAFT
○ OTHER ____
○ CASTING REPAIR PROCEDURE APPROVAL REQ'D (5.12.2.5)
☒ INSPECTION REQUIRED FOR CONNECTION WELDS (5.12.3.4a)
☒ MAG PARTICLE ☒ LIQUID PENETRANT
☒ RADIOGRAPHIC ☒ ULTRASONIC
☒ INSPECTION REQUIRED FOR CASTINGS (7.2.1.3 /5.12.1.5)
☒ MAG PARTICLE ☒ LIQUID PENETRANT
☒ RADIOGRAPHIC ☒ ULTRASONIC
○ HARDNESS TEST REQUIRED: ____ (7.2.2.3)
○ ADDITIONAL SUBSURFACE EXAMINATION FOR 7.2.1.3
FOR ____
METHOD ____

QA INSPECTION AND TESTING (CONT.)

TEST	NON-WIT	WIT	OBSERVE
○ HYDROSTATIC (7.3.2)	○	○	○
○ PERFORMANCE (7.3.3)	○	○	○
○ RETEST ON SEAL LEAKAGE (7.3.3.2d)	○	○	○
○ NPSH (7.3.4.2)	○	○	○
○ TRUE PEAK VELOCITY DATA (7.3.3.4d)	○	○	○
○ COMPLETE UNIT TEST (7.3.4.3)	○	○	○
○ SOUND LEVEL TEST (7.3.4.4)	○	○	○
○ CLEANLINESS PRIOR TO FINAL ASSEMBLY (7.2.2.2)	○	○	○
○ NOZZLE LOAD TEST (6.3.6)	○	○	○
○ CHECK FOR CO-PLANAR MOUNTING PAD SURFACES (6.3.3)	○	○	○
○ MECHANICAL RUN UNTIL OIL TEMP. STABLE (7.3.4.7.1)	○	○	○
○ 4 HR. MECHANICAL RUN AFTER OIL TEMP. STABLE (7.3.4.7.3)	○	○	○
○ 4 HR. MECH. RUN TEST (7.3.4.7.2)	○	○	○
○ BRG HSG RESONANCE TEST (7.3.4.6)	○	○	○
○ AUXILIARY EQUIPMENT TEST (7.3.4.5)	○	○	○
☒ IMPACT TESTING (5.12.4.3)	○	○	○
○ PER EN 13445			
○ PER ASME VIII			
○ ____	○	○	○

○ VENDOR KEEP REPAIR AND HT RECORDS (7.2.1.1c)
○ VENDOR SUBMIT TEST PROCEDURES (7.3.1.2 /9.2.5)
○ VENDOR SUBMIT TEST DATA WITHIN 24 HOURS (7.3.3.3a)
○ INCLUDE PLOTTED VIBRATION SPECTRA (5.9.3.3)
○ SUBMIT INSPECTION CHECK LIST (7.1.6)

REMARKS
____
____
40 ____
49 ____
50 ____
51 ____
52 ____
53 ____
54 ____
55 ____
56 ____
57 ____
58 ____
59 ____
60 ____

Figure No. 1 - Technical data sheets of the pump - SI units (continued)

CENTRIFUGAL PUMP DATA SHEET
VERTICALLY SUSPENDED (TYPE VS)
SI UNITS

PAGE 3 OF

JOB NO. ITEM NO.(S)
REQ /SPEC NO. /
PURCH ORDER NO. DATE
INQUIRY NO BY

CONSTRUCTION

ROTATION (VIEWED FROM CPLG END) ☐ CW ☐ CCW
PUMP TYPE: (1.3)
☐ VS1 ☐ VS2 ☐ VS3 ☐ VS4 ☐ VS5 ☐ VS6 ☐ VS7
CASING MOUNTING: ☐ SUMP COVER PLATE
☐ INLINE ☐ SEPARATE MOUNTING PLATE (6.3.8.3.1)
☐ SEPARATE SOLE PLATE (6.3.8.3.3)
CASING SPLIT:
☐ AXIAL ☐ RADIAL
CASING TYPE:
☐ SINGLE VOLUTE ☐ MULTIPLE VOLUTE ☐ DIFFUSER
CASE PRESSURE RATING:
☐ MAX ALLOWABLE WORKING PRESSURE bar
@ (°C)
☐ HYDROTEST PRESSURE bar
○ SUCTION PRESS. REGIONS MUST BE DESIGNED FOR MAWP (6.3.6.1)
☐ NOZZLE CONNECTIONS: (6.4.2)

	SIZE (DN)	FLANGE RATING	FACING	POSITION
SUCTION				
DISCHARGE				
BALANCE DRUM				

PRESSURE CASING AUX. CONNECTIONS: (6.4.3)

	NO.	SIZE (DN)	TYPE
☐ DRAIN			
☐ VENT			
☐ WARM-UP			
☐ BALANCE /LEAK-OFF			

☐ MACHINED AND STUDDED CONNECTIONS (6.4.3.8)
○ CYLINDRICAL THREADS REQUIRED (6.4.3.3)
ROTOR:
○ COMPONENT BALANCE TO ISO 1940 G1.0 (6.9.4.4)
○ SHRINK FIT -LIMITED MOVEMENT IMPELLERS (8.2.2.3)
COUPLINGS:
○ MANUFACTURER ☐ MODEL
☐ RATING (kW per 100 r/min)
☐ SPACER LENGTH mm ☐ SERVICE FACTOR
☐ RIGID
THROUGH COUPLINGS:
○ MANUFACTURER ☐ MODEL
☐ RATING (kW per 100 r/min) ○ LUBE
☐ SPACER LENGTH mm ☐ SERVICE FACTOR
☐ RIGID
DRIVER HALF COUPLING MOUNTED BY:
○ PUMP MFR. ○ DRIVER MFR. ○ PURCHASER
○ COUPLING BALANCED TO ISO 1940-1 G 6.3 (6.2.3)
○ COUPLING PER ISO 14691 (6.2.4)
○ COUPLING PER ISO 10441 (6.2.4)
○ COUPLING PER API671 (6.2.4)
○ NON SPARK COUPLING GUARD (6.2.14c)
○ COUPLING GUARD STANDARD PER (6.2.14a)
MECHANICAL SEAL:
○ SEE ATTACHED ISO 21049/API682 DATA SHEET

SURFACE PREPARATION AND PAINT

☐ MANUFACTURER'S STANDARD ○ OTHER (SEE BELOW)
PUMP:
○ PUMP SURFACE PREPARATION
☐ PRIMER
○ FINISH COAT
BASEPLATE /COLUMN: (6.3.17)
○ BASEPLATE SURFACE PREPARATION
○ PRIMER
○ FINISH COAT
SHIPMENT: (7.4.1)
○ DOMESTIC ○ EXPORT ○ EXPORT BOXING REQUIRED
○ OUTDOOR STORAGE MORE THAN 6 MONTHS
SPARE ROTOR ASSEMBLY PACKAGED FOR:
○ HORIZONTAL STORAGE ○ VERTICAL STORAGE
○ TYPE OF SHIPPING PREPARATION

HEATING AND COOLING

○ HEATING JACKET REQ'D. (5.8.9) ☐ COOLING REQ'D.
☐ COOLING WATER PIPING PLAN (6.5.3.1)
C.W. PIPING:
☐ PIPE ☐ TUBING; FITTINGS
C.W. PIPING MATERIALS:
☐ S.STEEL ☐ C.STEEL ☐ GALVANIZED
COOLING WATER REQUIREMENTS:
☐ BEARING HOUSING m^3/h @ bar
☐ HEAT EXCHANGER m^3/h @ bar
STEAM PIPING ○ TUBING ○ PIPE

BEARINGS AND LUBRICATION

BEARING (TYPE/NUMBER):
☐ RADIAL /
☐ THRUST /
LUBRICATION (5.11.3, 5.11.4):
☐ GREASE ☐ FLOOD ○ PURGE OIL MIST
☐ FLINGER ○ PURE OIL MIST
○ CONSTANT LEVEL OILER PREFERENCE (6.10.2.2):
☐ OIL VISC. ISO GRADE
○ REVIEW AND APPROVE THRUST BEARING SIZE
☐ OIL HEATER REQUIRED: ○ STEAM ○ ELECTRIC

INSTRUMENTATION (6.4.2)

○ ACCELEROMETER (6.4.2.1)
○ PROVISION FOR MOUNTING ONLY (6.10.2.11)
○ FLAT SURFACE REQ'D (6.10.2.12)
○ PRESSURE GAUGE TYPE
REMARKS:

☐ MASSES (kg)

PUMP		BASEPLATE	
DRIVER		TOTAL	
GEAR			

Figure N.1 - Technical data sheets of the pump - SI units (continued)

PAGE 4 OF

CENTRIFUGAL PUMP DATA SHEET
VERTICALLY SUSPENDED (TYPE VS)
SI UNITS

JOB NO. ITEM NO.(S)
REQ /SPEC NO. /
PURCH ORDER NO. DATE
INQUIRY NO BY

SPARE PARTS (TABLE 18)

- ○ START-UP ○ NORMAL MAINTENANCE
- ○ SPECIFY

OTHER PURCHASER REQUIREMENTS

- ○ COORDINATION MEETING REQUIRED (9.1.3)
- ○ MAXIMUM DISCHARGE PRESSURE TO INCLUDE (5.3.2)
  - ○ MAX RELATIVE DENSITY
  - ○ MAX DIA. IMPELLERS AND/OR NO OF STAGES
  - ○ OPERATION TO TRIP SPEED
- ○ CONNECTION DESIGN APPROVAL (5.12.3.4)
- ○ TORSIONAL ANALYSIS REQUIRED (5.9.2.1)
- ○ TORSIONAL ANALYSIS REPORT (5.9.2.6)
- ○ PROGRESS REPORTS (9.3.3)
- ○ OUTLINE OF PROCEDURES FOR OPTIONAL TESTS (9.2.5)
- ○ ADDITIONAL DATA REQUIRING 20 YEARS RETENTION (7.2.2.16)
- MANIFOLD PIPING TO SINGLE CONNECTION (6.5.1.6)
  - ☒ VENT ☒ VENT ☒ COOLING WATER
- ☒ MOUNT SEAL RESERVOIR OFF BASEPLATE (6.5.1.4)
- ☒ FLANGES REQ'D IN PLACE OF SOCKET WELD UNIONS (6.5.2.8)
- CONNECTION BOLTING ○ PTFE COATING ○ SS
  - ○ PAINTED ○ ASTM A153 GALVANIZED
- ☒ INSTALLATION LIST IN PROPOSAL (9.2.3.L)

○ VERTICAL PUMPS

- ☐ PUMP THRUST: (+) UP (-) DOWN
  - AT MIN. FLOW ____ (N) ____ (N)
  - AT RATED FLOW ____ (N) ____ (N)
  - MAX THRUST ____ (N) ____ (N)
- ☒ SOLEPLATE REQ'D. (9.3.8.3.3) ____ (m) X ____ (m)
- ○ SEPARATE MOUNTING PLATE REQUIRED (9.3.8.3.2)
- ☐ SOLEPLATE THICKNESS ____ (mm)

COLUMN PIPE: ☐ FLANGED ☐ THREADED

- ☐ DIAMETER ____ (mm) LENGTH ____ (m)

GUIDE BUSHINGS ☐ ☐

- ☐ NUMBER ____
- ☐ LINE SHAFT BEARING SPACING ____ (mm)

GUIDE BUSHINGS LUBE:

- ☐ WATER ☐ OIL
- ☐ GREASE ☐ PUMPAGE

LINESHAFT: ☒ OPEN ☒ ENCLOSED

- ☐ LINE SHAFT DIAMETER: ____ (mm)
- ☐ TUBE DIAMETER: ____ (mm)

LINESHAFT COUPLING:

- ☐ LINE SHAFT DIAMETER: ☐ SLEEVE & KEY ☐ THREADED
- ☐ SUCTION CAN THICKNESS ____ (mm)
  - ☐ LENGTH ____ (m)
  - ☐ DIAMETER ____ (m)
- ○ SUCTION STRAINER TYPE ____
- ○ FLOAT & ROD ○ FLOAT SWITCH
- ○ IMPELLER COLLETS ACCEPTABLE (5.6.3)
- ○ HARDENED SLEEVES UNDER BEARINGS (9.3.10.5)

VERTICAL PUMPS (CONT.)

- ○ PUMP AND STRUCTURE DYNAMIC ANALYSIS (9.3.5)
- ○ DRAIN PIPED TO SURFACE (9.3.13.5)

QA INSPECTION AND TESTING

- ○ SHOP INSPECTION (7.1.4) ○ PERF. CURVE APPROVAL
- ☒ TEST WITH SUBSTITUTE SEAL (7.3.3.2b)

TEST	NON-WIT	WIT	OBSERVE
○ HYDROSTATIC TEST OF BOWLS AND COLUMN (9.3.3.2)	○	○	○
○ HYDROSTATIC (7.3.2)	○	○	○
○ PERFORMANCE (7.3.3)	○	○	○
○ RETEST ON SEAL LEGS (7.3.3.2d)	○	○	○
○ NPSH (7.3.4.2)	○	○	○
○ COMPLETE UNIT TEST (7.3.4.3)	○	○	○
○ SOUND LEVEL TEST (7.3.4.4)	○	○	○
○ CLEANLINESS PRIOR TO FINAL ASSEMBLY (7.2.2.2)	○	○	○
○ NOZZLE LOAD TEST (6.3.6)	○	○	○
○ 4 HR. MECH. RUN TEST (7.3.4.7.2)	○	○	○
○ MECHANICAL RUN UNTIL OIL TEMP. STABLE (7.3.4.7.1)	○	○	○
○ 4 HR. MECHANICAL RUN AFTER OIL TEMP. STABLE (7.3.4.7.3)	○	○	○
○ TRUE PEAK VELOCITY DATA (7.3.3.4.d)	○	○	○
○ RESONANCE TEST (9.3.9.2)	○	○	○
○ AUXILIARY EQUIPMENT TEST (7.3.4.5)	○	○	○
☒ IMPACT TESTING (5.12.4.3)	○	○	○
○ PER EN 13445			
○ PER ASME VIII			

- ○ VENDOR KEEP REPAIR AND HT RECORDS (7.2.1.1c)
- ○ VENDOR SUBMIT TEST PROCEDURES (7.3.1.2/9.2.5)
- ○ VENDOR SUBMIT TEST DATA WITHIN 24 HOURS (7.3.3.3c)
- ○ INCLUDE PLOTTED VIBRATION SPECTRA (5.9.3.3)
- ○ RECORD FINAL ASSEMBLY RUNNING CLEARANCES
- ○ COMPLETION OF INSPECTION CHECK LIST (7.1.6)
- ○ MATERIAL CERTIFICATION REQUIRED (5.12.1.8)
  - ○ CASING ○ IMPELLER ○ SHAFT
  - ○ OTHER ____
- ○ CASTING REPAIR PROCEDURE APPROVAL REQ'D (5.12.2.5)
- ☒ INSPECTION REQUIRED FOR CONNECTION WELDS (5.12.3.4)
  - ☒ MAG PARTICLE ☒ LIQUID PENETRANT
  - ☒ RADIOGRAPHIC ☒ ULTRASONIC
- ☒ INSPECTION REQUIRED FOR CASTINGS (7.2.1.3) (5.12.1.5)
  - ☒ MAG PARTICLE ☒ LIQUID PENETRANT
  - ☒ RADIOGRAPHIC ☒ ULTRASONIC
- ○ HARDNESS TEST REQUIRED (7.2.2.3)
- ○ ADDITIONAL SUBSURFACE EXAMINATION (7.2.1.3)
  - FOR ____
  - METHOD ____

SUMP ARRANGEMENT

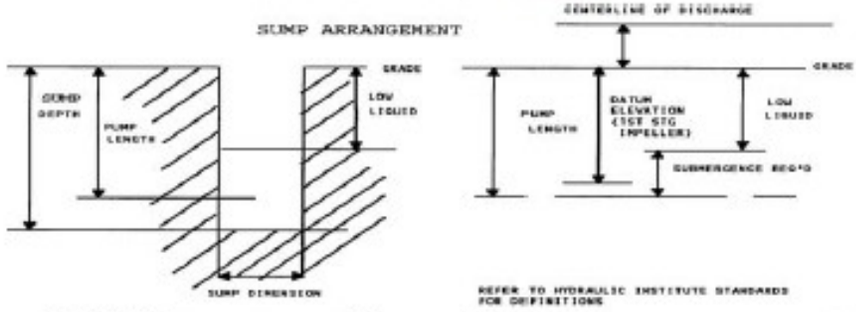

REFER TO HYDRAULIC INSTITUTE STANDARDS FOR DEFINITIONS

- ○ SUMP DEPTH ____ (FT)
- ○ SUMP DIMENSION ____ (FT)
- ○ LOW LIQUID ____ (FT)
- ☐ PUMP LENGTH ____ (FT)
- ☐ SUBMERGENCE REQ'D ____ (FT)
- ☐ CENTERLINE DISCHARGE HEIGHT ____ (FT)
- ☐ DATUM ELEVATION ____ (FT)

Figure No. 1 - Technical data sheets of the pump - SI units (continued)

PAGE 5 OF

CENTRIFUGAL PUMP

JOB NO. ITEM NO.(S)
REQ /SPEC NO. /
PURCH ORDER NO. DATE
INQUIRY NO BY

☐ PRESSURE DESIGN CODES
○ WELDING REQUIREMENTS
☐ PURCHASER DEFINED MATERIAL INSPECTIONS

1 APPLICABLE TO: ○ PROPOSALS ○ PURCHASE ☐ AS BUILT
2 FOR UNIT
3 SITE SERVICE
4 NOTES INFORMATION BELOW TO BE COMPLETED BY PURCHASER ☐ BY MANUFACTURER ○ BY MANUFACTURER OR PURCHASER
5
5 PRESSURE VESSEL DESIGN CODE REFERENCES.
6 ☐ THESE REFERENCES MUST BE LISTED BY THE MANUFACTURER
CASTING FACTORS USED IN DESIGN (5.3.4) (TABLE 3) ☐
SOURCE OF MATERIAL PROPERTIES ☐
##
WELDING AND REPAIRS (5.12.3)
THESE REFERENCES MUST BE LISTED BY THE PURCHASER. (DEFAULT TO TABLE 10 IF NO PURCHASER PREFERENCE IS STATED)
○ ALTERNATIVE WELDING CODES AND STANDARDS (5.12.3.1)

Welding Requirement (Applicable Code or Standard)	Purchaser defined	Default per Table 10
Welder/operator qualification	○	○
Welding procedure qualification	○	○
Non-pressure retaining structural welding such as baseplates or supports	○	○
Magnetic particle or liquid penetrant examination of the plate edges	○	○
Postweld heat treatment	○	○
Postweld heat treatment of casing fabrication welds	○	○

MATERIAL INSPECTION (5.2.2.1) (5.2.2.3)
THESE REFERENCES MUST BE LISTED BY THE PURCHASER (DEFAULT TO TABLE 13 IF NO PURCHASER PREFERENCE IS STATED)
○ ALTERNATIVE MATERIAL INSPECTIONS AND ACCEPTANCE CRITERIA (SEE TABLE 13)

Type of inspection	Methods	For fabrications	Castings
Radiography	○	○	○
Ultrasonic inspection	○	○	○
Magnetic particle inspection	○	○	○
Liquid penetrant inspection	○	○	○

REMARKS

Figure N.1 - Technical data sheets of the pump - SI units (continuation)

CENTRIFUGAL PUMP
PROCESS DATA SHEET
US CUSTOMARY UNITS

PAGE 1 OF ____
JOB NO. ____ ITEM NO.(S) ____
REQ /SPEC NO. ____ /
PURCH ORDER NO. ____ DATE ____
INQUIRY NO ____ BY ____

APPLICABLE TO: ○ PROPOSALS ○ PURCHASE ☒ AS BUILT
FOR ____ UNIT ____
SITE ____ SERVICE ____
NOTES: INFORMATION BELOW TO BE COMPLETED ○ BY PURCHASER ☐ BY MANUFACTURER ☒ BY MANUFACTURER OR PURCHASER

○ DATA SHEETS

	ITEM NO.	ATTACHED	ITEM NO.	ATTACHED	ITEM NO.	ATTACHED
PUMP		○		○		○
MOTOR		○		○		○
GEAR		○		○		○
TURBINE		○		○		○

REVISIONS

NO	DATE	BY
1		
2		
3		
4		
5		

APPLICABLE OVERLAY STANDARD (S):

○ OPERATING CONDITIONS (5.1.3)

FLOW, NORMAL ____ (GPM) RATED ____ (GPM)
OTHER ____
SUCTION PRESSURE MAX./RATED ____ / ____ (PSIG)
DISCHARGE PRESSURE ____ (PSIG)
DIFFERENTIAL PRESSURE ____ (PSI)
DIFF. HEAD ____ (FT) NPSHA ____ (FT)
PROCESS VARIATIONS (5.1.4) ____
STARTING CONDITIONS (5.1.6) ____
SERVICE: ○ CONT. ○ INTERMITTENT (STARTS/DAY) ____
○ PARALLEL OPERATION REQ'D (5.1.13)

○ SITE DATA (5.1.3)

LOCATION: (5.1.30)
○ INDOOR ○ HEATED ○ OUTDOOR ○ UNHEATED
○ ELECTRICAL AREA CLASSIFICATION (5.1.24 /6.1.4)
CL ____ GR ____ DIV ____
○ WINTERIZATION REQ'D ○ TROPICALIZATION REQ'D.
SITE DATA (5.1.30)
○ ALTITUDE ____ (FT) BAROMETER ____ (PSIA)
○ RANGE OF AMBIENT TEMPS: MIN/MAX. ____ / ____ (°F)
○ RELATIVE HUMIDITY: MIN /MAX ____ / ____ (%)
UNUSUAL CONDITIONS: (5.1.30) ○ DUST ○ FUMES
○ OTHER ____

○ DRIVER TYPE

○ INDUCTION MOTOR ○ STEAM TURBINE ○ GEAR
○ OTHER ____

○ MOTOR DRIVER (5.1.1 /6.1.4)

☒ MANUFACTURER ____
☐ ____ (HP) ☐ ____ (RPM)
☐ FRAME ____ ☒ ENCLOSURE ____
☒ HORIZONTAL ☒ VERTICAL ☒ SERVICE FACTOR ____
☒ VOLTS/PHASE/HERTZ ____ / ____ / ____
○ TYPE ____
○ MINIMUM STARTING VOLTAGE (5.1.5)
☒ INSULATION ____ ○ TEMP. RISE ____
☒ FULL LOAD AMPS ____
☒ LOCKED ROTOR AMPS ____
☒ STARTING METHOD ____
☒ LUBE ____
BEARINGS (TYPE/NUMBER):
☐ RADIAL ____ /
☐ THRUST ____ /
☐ VERTICAL THRUST CAPACITY
UP ____ (LBS) DOWN ____ (LBS)

○ LIQUID (5.1.3)

LIQUID TYPE OR NAME ____
○ HAZARDOUS ○ FLAMMABLE ○ ____ (5.1.5)

	MIN.	NORMAL	MAX.
PUMPING TEMP (°F)			
VAPOR PRESS. (PSIA)			
RELATIVE DENSITY (SG):			
VISCOSITY (cP)			

SPECIFIC HEAT, Cp ____ (BTU/LB °F)
○ CHLORIDE CONCENTRATION (5.5.2.4) ____ (PPM)
○ H_2S CONCENTRATION ____ (PPM) WET (5.12.1.12c)
CORROSIVE /EROSIVE AGENT ____ (5.12.1.9)

MATERIALS (5.12.1.1)

○ ANNEX H CLASS (5.12.1.1) ____
○ MIN DESIGN METAL TEMP (5.12.4.1) ____ (°F)
○ REDUCED HARDNESS MATERIALS REQ'D. (5.12.1.12)
☐ BARREL/CASE ____ IMPELLER ____
☐ CASE/IMPELLER WEAR RINGS ____
☐ SHAFT ____
☐ DIFFUSERS ____

☒ PERFORMANCE.

PROPOSAL CURVE NO. ____ ☐ RPM ____
☐ IMPELLER DIA. RATED ____ MAX. ____ MIN. ____ (IN.)
☐ IMPELLER TYPE ____
☐ RATED POWER ____ (BHP) EFFICIENCY ____ (%)
☐ MINIMUM CONTINUOUS FLOW:
THERMAL ____ (GPM) STABLE ____ (GPM)
☐ PREFERRED OPER. REGION ____ TO ____ (GPM)
☐ ALLOWABLE OPER. REGION ____ TO ____ (GPM)
☐ MAX HEAD @ RATED IMPELLER ____ (FT)
☐ MAX POWER @ RATED IMPELLER ____ (BHP)
☐ NPSHR AT RATED FLOW ____ (FT) (5.1.10)
○ MAX. SUCTION SPECIFIC SPEED: ____ (5.1.11)
○ MAX. SOUND PRESS. LEVEL REQ'D. ____ (dBA) (5.1.16)
☐ EST MAX SOUND PRESS. LEVEL ____ (dBA) (5.1.16)
☐ EST MAX SOUND POWER LEVEL ____ (dBA) (5.1.16)

○ UTILITY CONDITIONS (6.1.3)

ELECTRICITY	VOLTAGE	PHASE	HERTZ
DRIVERS			
HEATING			

SYSTEM VOLTAGE DIP ○ 80% ○ OTHER ____ (6.1.5)

STEAM	MAX. PRESS.	MAX. TEMP.	MIN. PRESS.	MIN. TEMP.
DRIVERS				
HEATING				

COOLING WATER: (5.1.19) SOURCE ____
SUPPLY TEMP. ____ (°F) MAX. RETURN TEMP. ____ (°F)
NORM. PRESS. ____ (PSIG) DESIGN PRESS. ____ (PSIG)
MIN. RET. PRESS. ____ (PSIG) MAX. ALLOW. D.P. ____ (PSI)
CHLORIDE CONCENTRATION: ____ (PPM)

Figure No. 2 - Bomb Data Sheets - USA system units

CENTRIFUGAL PUMP
PROCESS DATA SHEET
US CUSTOMARY UNITS

PAGE 2 OF

JOB NO. ITEM NO.(S)
REQ /SPEC NO. /
PURCH ORDER NO. DATE
INQUIRY NO BY

Figure N.2 – Bombs Specifications - U.S. system units (continuation)

CENTRIFUGAL PUMP DATA SHEET
SINGLE STAGE OVERHUNG (TYPE OH)
US CUSTOMARY UNITS

PAGE 3 OF ____

JOB NO. _____ ITEM NO.(S) _____
REQ./SPEC NO. _____ / _____
PURCH ORDER NO. _____ DATE _____
INQUIRY NO _____ BY _____

CONSTRUCTION

ROTATION: (VIEWED FROM COUPLING END) ☐ CW ☐ CCW
PUMP TYPE: (4.1)
☐ OH2 ☐ OH3 ☐ OH6 ☐ OTHER _____
CASING MOUNTING:
☐ CENTERLINE ☐ IN-LINE ☐ OTHER _____

CASING TYPE:
☐ SINGLE VOLUTE ☐ MULTIPLE VOLUTE ☐ DIFFUSER
CASE PRESSURE RATING:
○ OH6 PUMP SUCTION REGION DESIGNED FOR MAWP (5.3.6)
☐ MAX ALLOWABLE WORKING PRESSURE _____ (PSIG)
@ _____ (°F)
☐ HYDROTEST PRESSURE _____ (PSIG)
☐ NOZZLE CONNECTIONS: (5.4.2)

	SIZE (IN)	FLANGE RATING (LBS)	FACE	POSITION
SUCTION				
DISCHARGE				

PRESSURE CASING AUX. CONNECTIONS: (5.4.3)

	NO.	SIZE (NPS)	TYPE
☐ DRAIN			
☐ VENT			
☐ WARM-UP			

☐ MACHINED AND STUDDED CONNECTIONS (5.4.3.8)
○ CYLINDRICAL THREADS REQUIRED (5.4.3.3)
ROTOR:
○ COMPONENT BALANCE TO ISO 1940 G1.0 (5.9.4.4)
COUPLINGS: (6.2.2)
○ MANUFACTURER _____ ☐ MODEL _____
☐ RATING (HP/100 rpm in) _____
☐ SPACER LENGTH _____ (IN) ☐ SERVICE FACT. _____
○ COUPLING BALANCED TO ISO 1940-1 G6.3 (6.2.3)
○ COUPLING WITH PROPRIETARY CLAMPING DEVICE (6.2.11)
○ COUPLING PER ISO 14691 (6.2.4)
○ COUPLING PER ISO 10441 (6.2.4)
○ COUPLING PER API671 (6.2.4) ○ ASME B15.1
○ NON SPARK COUPLING GUARD (6.2.14c)
○ COUPLING GUARD STANDARD PER _____ (6.2.14a)
BASEPLATES:
☐ API BASEPLATE NUMBER _____ (ANNEX D)
○ NON-GROUT CONSTRUCTION (6.3.13)
○ OTHER _____
MECHANICAL SEAL: (6.8.1)
○ SEE ATTACHED ISO 21049/API682 DATA SHEET

SURFACE PREPARATION AND PAINT

○ MANUFACTURER'S STANDARD ○ OTHER (SEE BELOW)
○ SPECIFICATION NO. _____
PUMP:
○ PRIMER _____
○ FINISH COAT _____
BASEPLATE: (6.3.17)
○ PRIMER _____
○ FINISH COAT _____
○ DETAILS OF LIFTING DEVICES (6.3.20) _____
SHIPMENT: (7.4.1)
○ DOMESTIC ○ EXPORT ○ EXPORT BOXING REQUIRED
○ OUTDOOR STORAGE MORE THAN 6 MONTHS
SPARE ROTOR ASSEMBLY PACKAGED FOR:
○ HORIZONTAL STORAGE ○ VERTICAL STORAGE
○ TYPE OF SHIPPING PREPARATION _____

HEATING AND COOLING

○ HEATING JACKET REQ'D. (5.8.9)
☐ COOLING REQ'D.
☐ COOLING WATER PIPING PLAN (5.5.3.1) _____
C.W. PIPING:
☐ PIPE ☐ TUBING; FITTINGS _____
C.W. PIPING MATERIALS:
☐ S.STEEL ☐ C.STEEL ☐ GALVANIZED
COOLING WATER REQUIREMENTS:
☐ BEARING HOUSING _____ (GPM)
HEAT EXCHANGER _____ (GPM)
TOTAL COOLING WATER _____ (GPM)
HEAT MEDIUM: ○ STEAM ○ OTHER
HEATING PIPING: ○ TUBING ○ PIPE

BEARINGS AND LUBRICATION

BEARING (TYPE/NUMBER) (5.10.1):
☐ RADIAL _____ / _____
☐ THRUST _____ / _____
LUBRICATION (5.11.3, 5.11.4):
☐ GREASE ☐ OIL
○ PURGE OIL MIST ○ PURE OIL MIST
○ CONSTANT LEVEL OILER PREFERENCE (5.10.2.2): _____
☐ OIL VISC. ISO GRADE

INSTRUMENTATION

○ ACCELEROMETER (6.4.2.1) _____
○ PROVISION FOR MOUNTING ONLY (5.10.2.11)
○ FLAT SURFACE REQ'D (5.10.2.12)
○ TEMP. GAUGES (WITH THERMOWELLS) (8.1.3.6) _____
○ PRESSURE GAUGE TYPE _____

REMARKS: _____

☐ **WEIGHTS**

WEIGHT OF PUMP (LBS) _____
WEIGHT OF BASEPLATE (LBS) _____
WEIGHT OF DRIVER (LBS) _____
TOTAL WEIGHT (LBS) _____

Figure No. 2 - Bomb Cards - USA system units (continuation)

CENTRIFUGAL PUMP DATA SHEET
SINGLE STAGE OVERHUNG (TYPE OH)
US CUSTOMARY UNITS

PAGE 4 OF ____

JOB NO. _____ ITEM NO.(S) _____
REQ /SPEC NO. _____ / _____
PURCH ORDER NO. _____ DATE _____
INQUIRY NO _____ BY _____

SPARE PARTS (TABLE 18)

- ○ START-UP ○ NORMAL MAINTENANCE
- ○ _____

OTHER PURCHASER REQUIREMENTS

- ○ COORDINATION MEETING REQUIRED (9.1.3)
- ○ MAXIMUM DISCHARGE PRESSURE TO INCLUDE (5.3.2)
  - ○ MAX RELATIVE DENSITY
  - ○ MAX DIA. IMPELLERS AND/OR NO OF STAGES
  - ○ OPERATION TO TRIP SPEED
- ○ OH3 BEARING HS6 LIFTER (8.1.2.6)
- ○ CONNECTION DESIGN APPROVAL (5.12.3.4)
- ☒ TORSIONAL ANALYSIS REQUIRED (5.9.2.1)
- ○ TORSIONAL ANALYSIS REPORT (5.9.2.6)
- ○ PROGRESS REPORTS (9.3.3)
- ○ OUTLINE OF PROCEDURES FOR OPTIONAL TESTS (9.2.5)
- ○ ADDITIONAL DATA REQUIRING 20 YEARS RETENTION (7.2.1.1δ)

PIPING AND APPURTENANCES

MANIFOLD PIPING TO SINGLE CONNECTION (6.5.1.6)
☒ VENT ☒ DRAIN ☒ COOLING WATER

- ☒ MOUNT SEAL RESERVOIR OFF BASEPLATE (6.5.1.4)
- ☒ FLANGES REQ'D IN PLACE OF SOCKET WELD UNIONS (6.5.2.
- ☒ INSTALLATION LIST IN PROPOSAL (9.2.3L)

CONNECTION BOLTING

- ○ PTFE COATING ○ ASTM A153 GALVANIZED
- ○ PAINTED ○ SS

QA INSPECTION AND TESTING

- ○ SHOP INSPECTION (7.1.4)
- ○ PERFORMANCE CURVE APPR.
- ☒ TEST WITH SUBSTITUTE SEAL (7.3.3.2b)
- ○ MATERIAL CERTIFICATION REQUIRED (5.12.1.8)
  - ○ CASING ○ IMPELLER ○ SHAFT
  - ○ OTHER _____
- ○ CASTING REPAIR PROCEDURE APPROVAL REQ'D (5.12.2.5)
- ☒ INSPECTION REQUIRED FOR CONNECTION WELDS (5.12.3.4e)
  - ☒ MAG PARTICLE ☒ LIQUID PENETRANT
  - ☒ RADIOGRAPHIC ☒ ULTRASONIC
- ☒ INSPECTION REQUIRED FOR CASTINGS (7.2.1.3 /5.12.1.5)
  - ☒ MAG PARTICLE ☒ LIQUID PENETRANT
  - ☒ RADIOGRAPHIC ☒ ULTRASONIC
- ○ HARDNESS TEST REQUIRED: _____ (7.2.2.3)
- ○ ADDITIONAL SUBSURFACE EXAMINATION FOR 7.2.1.3
  FOR _____
  METHOD _____

QA INSPECTION AND TESTING (CONT.)

TEST	NON-WIT	WIT	OBSERVE
○ HYDROSTATIC (7.3.2)	○	○	○
○ PERFORMANCE (7.3.3)	○	○	○
○ RETEST ON SEAL LEAKAGE (7.3.3.2d)	○	○	○
○ NPSH (7.3.4.2)	○	○	○
○ TRUE PEAK VELOCITY DATA (7.3.3.4d)	○	○	○
○ COMPLETE UNIT TEST (7.3.4.3)	○	○	○
○ SOUND LEVEL TEST (7.3.4.4)	○	○	○
○ CLEANLINESS PRIOR TO FINAL ASSEMBLY (7.2.2.2)	○	○	○
○ NOZZLE LOAD TEST (6.3.6)	○	○	○
○ CHECK FOR CO-PLANAR MOUNTING PAD SURFACES (6.3.3)	○	○	○
○ MECHANICAL RUN UNTIL OIL TEMP. STABLE (7.3.4.7.1)	○	○	○
○ 4 HR. MECHANICAL RUN AFTER OIL TEMP. STABLE (7.3.4.7.3)	○	○	○
○ 4 HR. MECH. RUN TEST (7.3.4.7.2)	○	○	○
○ BRG HSG RESONANCE TEST (7.3.4.6)	○	○	○
○ AUXILIARY EQUIPMENT TEST (7.3.4.5)	○	○	○
☒ IMPACT TESTING (5.12.4.3) ○ PER EN 13445 ○ PER ASME VIII	○	○	○
○ _____	○	○	○

- ○ VENDOR KEEP REPAIR AND HT RECORDS (7.2.1.1c)
- ○ VENDOR SUBMIT TEST PROCEDURES (7.3.1.2 /9.2.5)
- ○ VENDOR SUBMIT TEST DATA WITHIN 24 HOURS (7.3.3.3e)
- ○ INCLUDE PLOTTED VIBRATION SPECTRA (5.9.3.3)
- ○ SUBMIT INSPECTION CHECK LIST (7.1.6)

REMARKS

Figure No. 2 – Bomb Cards - U.S. system units (continuation)

CENTRIFUGAL PUMP DATA SHEET
BETWEEN BEARINGS (TYPE BB)
US CUSTOMARY UNITS

PAGE 3 OF

JOB NO. ITEM NO.(S)
REQ /SPEC NO. /
PURCH ORDER NO. DATE
INQUIRY NO BY

CONSTRUCTION

ROTATION (VIEWED FROM COUPLING END) ☐ CW ☐ CCW
PUMP TYPE: (6.1)
☐ BB1 ☐ BB2 ☐ BB3 ☐ BB5
CASING MOUNTING:
☐ CENTERLINE ☐ NEAR CENTERLINE
☐ FOOT
CASING SPLIT:
☐ AXIAL ☐ RADIAL
CASING TYPE:
☐ SINGLE VOLUTE ☐ MULTIPLE VOLUTE ☐ DIFFUSER
☐ BETWEEN BEARINGS ☐ BARREL
CASE PRESSURE RATING:
☐ MAX ALLOWABLE WORKING PRESSURE (PSIG)
@ (°F)
☐ HYDROTEST PRESSURE (PSIG)
○ SUCTION PRESS. REGIONS MUST BE DESIGNED
FOR MAWP (6.3.6)
☐ NOZZLE CONNECTIONS: (5.4.2)

	SIZE (NPS)	FLANGE RATING (LBS)	FACING	POSITION
SUCTION				
DISCHARGE				
BALANCE DRUM				

PRESSURE CASING AUX. CONNECTIONS: (5.4.3)

	NO.	SIZE (NPS)	TYPE
☐ DRAIN			
☐ VENT			
☐ PRESS. GAUGE			
☐ TEMP GAUGE			
☐ WARM-UP			
☐ BALANCE /LEAK-OFF			

☐ MACHINED AND STUDDED CONNECTIONS (5.4.3.8)
○ CYLINDRICAL THREADS REQUIRED (5.4.3.3)
ROTOR:
○ COMPONENT BALANCE TO ISO 1940 G1.0 (5.9.4.4)
○ SHRINK FIT -LIMITED MOVEMENT IMPELLERS (8.2.2.3)
COUPLINGS: (5.2.2)
○ MANUFACTURER ☐ MODEL
☐ RATING (HP/100 rpm in)
☐ SPACER LENGTH (IN) ☐ SERVICE FACTOR
DRIVER HALF COUPLING MOUNTED BY:
○ PUMP MFR. ○ DRIVER MFR. ○ PURCHASER
○ COUPLING WITH HYDRAULIC FIT (5.2.10)
○ COUPLING BALANCED TO ISO 1940-1 G6.3 (5.2.3)
○ COUPLING PER ISO 14691 (5.2.4)
○ COUPLING PER ISO 10441 (5.2.4)
○ COUPLING PER API671 (5.2.4)
○ NON SPARK COUPLING GUARD (5.2.14c)
○ COUPLING GUARD STANDARD PER (5.2.14a)
BASEPLATE:
☐ API BASEPLATE NUMBER (ANNEX D)
○ NON-GROUT CONSTRUCTION (5.3.13)
○ OTHER
MECHANICAL SEAL: (5.8.1)
○ SEE ATTACHED ISO 21049/API682 DATA SHEET

SURFACE PREPARATION AND PAINT

○ MANUFACTURER'S STANDARD ○ OTHER (SEE BELOW)
○ SPECIFICATION NO.
PUMP:
○ PUMP SURFACE PREPARATION
○ PRIMER
○ FINISH COAT
BASEPLATE: (5.3.17)
○ BASEPLATE SURFACE PREPARATION
○ PRIMER
○ FINISH COAT
○ DETAILS OF LIFTING DEVICES (5.3.20)
SHIPMENT: (7.4.1)
○ DOMESTIC ○ EXPORT ○ EXPORT BOXING REQUIRED
○ OUTDOOR STORAGE MORE THAN 6 MONTHS
SPARE ROTOR ASSEMBLY PACKAGED FOR:
○ SHIPPING CONTAINER (8.2.8.3) ○ VERTICAL STORAGE (8.2.8.2)
○ TYPE OF SHIPPING PREPARATION ○ N2 PURGE (8.2.8.4)

HEATING AND COOLING

○ HEATING JACKET REQ'D. (5.8.9) ☐ COOLING REQ'D.
☐ COOLING WATER PIPING PLAN (5.5.3.1)
C.W. PIPING:
☐ PIPE ☐ TUBING; FITTINGS
C.W. PIPING MATERIALS:
☐ S.STEEL ☐ C.STEEL ☐ GALVANIZED
COOLING WATER REQUIREMENTS:
☐ BEARING HOUSING (GPM) @ (PSIG)
☐ HEAT EXCHANGER (GPM) @ (PSIG)
STEAM PIPING ○ TUBING ○ PIPE

BEARINGS AND LUBRICATION

BEARING (TYPE/NUMBER) (5.10.1):
☐ RADIAL /
☐ THRUST /
LUBRICATION (5.11.3, 5.11.4):
☐ RING OIL ☐ HYDRODYNAMIC ○ PURGE OIL MIST ○ PURE OIL MIST
○ CONSTANT LEVEL OILER PREFERENCE (5.10.2.2):
○ PRESSURE LUBE SYS. ISO 10438-3 ○ ISO 10438-2 (8.2.6.3/8.2.6.5)
☐ OIL VISC. ISO GRADE
○ OIL PRESS. TO BE GREATER THAN COOLANT PRESSURE
○ REVIEW AND APPROVE THRUST BEARING SIZE (8.2.5.2.4)
☐ OIL HEATER REQUIRED: ○ STEAM ○ ELECTRIC

INSTRUMENTATION (5.4.2)

○ SEE ATTACHED API670 DATA SHEET
○ ACCELEROMETER (S) (5.4.2.1)
○ PROVISION FOR VIBRATION PROBES (5.4.2.2)
○ RADIAL PER BRG. ○ AXIAL PER BRG.
○ PROVISION FOR MOUNTING ONLY (5.10.2.11)
○ FLAT SURFACE REQ'D (5.10.2.12)
○ RADIAL BEARING METAL TEMP. ○ THRUST BRG METAL TEMP.
○ TEMP. GAUGES (WITH THERMOWELLS)
○ MONITORS AND CABLES SUPPLIED BY (5.4.2.4)
REMARKS

☐ WEIGHTS (LBS)

PUMP		BASEPLATE	
DRIVER		TOTAL	
GEAR			

Figure No. 2 - Bomb Specifications - U.S. system units (continuation)

SPARE PARTS (TABLE 18)

- ○ START-UP ○ NORMAL MAINTENANCE
- ○ SPECIFY _____

OTHER PURCHASER REQUIREMENTS

- ○ COORDINATION MEETING REQUIRED (9.1.3)
- ○ MAXIMUM DISCHARGE PRESSURE TO INCLUDE (5.3.2)
  - ○ MAX RELATIVE DENSITY
  - ○ MAX DIA. IMPELLERS AND/OR NO OF STAGES
  - ○ OPERATION TO TRIP SPEED
- ○ CONNECTION DESIGN APPROVAL (5.12.3.4/8.2.1.4)
- ○ INERT GAS INSERTED STORAGE - SPARE CARTRIDGE (8.2.8.4)
- ○ TORSIONAL ANALYSIS REQUIRED (5.9.2.1)
- ○ TORSIONAL ANALYSIS REPORT (5.9.2.6)
- ○ PROGRESS REPORTS (9.3.3)
- ○ OUTLINE OF PROCEDURES FOR OPTIONAL TESTS (9.2.5)
- ○ ADDITIONAL DATA REQUIRING 20 YEARS RETENTION (7.2.2.1f)
- [○] LATERAL ANALYSIS REQUIRED (8.2.4.1 /8.2.4.1.3)
- [○] DYNAMIC BALANCE ROTOR (8.2.4.2)
- MANIFOLD PIPING TO SINGLE CONNECTION (6.5.1.6)
  - [○] VENT [○] DRAIN [○] COOLING WATER
- [○] MOUNT SEAL RESERVOIR OFF BASEPLATE (6.5.1.4)
- [○] FLANGES REQUIRED IN PLACE OF SOCKET WELD UNIONS (6.5.2.
CONNECTION BOLTING
  - ○ PTFE COATING ○ ASTM A153 GALVANIZED
  - ○ PAINTED ○ SS
- [○] INSTALLATION LIST IN PROPOSAL (9.2.3L)

QA INSPECTION AND TESTING

- ○ SHOP INSPECTION (7.1.4)
- ○ PERFORMANCE CURVE APPR.
- [○] TEST WITH SUBSTITUTE SEAL (7.3.3.2b)
- ○ MATERIAL CERTIFICATION REQUIRED (5.12.1.8)
  - ○ CASING ○ IMPELLER ○ SHAFT
  - ○ OTHER _____
- ○ CASTING REPAIR PROCEDURE APPROVAL REQ'D (5.12.2.5)
- [○] INSPECTION REQUIRED FOR CONNECTION WELDS (5.12.3.4e)
  - [○] MAG PARTICLE [○] LIQUID PENETRANT
  - [○] RADIOGRAPHIC [○] ULTRASONIC
- [○] INSPECTION REQUIRED FOR CASTINGS (7.2.1.3)(5.12.1.5)
  - [○] MAG PARTICLE [○] LIQUID PENETRANT
  - [○] RADIOGRAPHIC [○] ULTRASONIC
- ○ HARDNESS TEST REQUIRED. _____ (7.2.2.3)
- ○ ADDITIONAL SURFACE /SUBSURFACE EXAMINATION (7.2.1.3)
  FOR _____
  METHOD _____

QA INSPECTION AND TESTING (CONT.)

TEST	NON-WIT	WIT	OBSERVE
○ HYDROSTATIC (7.3.2)	○	○	○
○ PERFORMANCE (7.3.3)	○	○	○
○ NPSH (7.3.4.2)	○	○	○
○ RETEST ON SEAL LKGE (7.3.3.2d)	○	○	○
○ RETEST REQUIRED AFTER FINAL HEAD ADJUSTMENT (7.3.3.5b)	○	○	○
○ COMPLETE UNIT TEST (7.3.4.3)	○	○	○
○ SOUND LEVEL TEST (7.3.4.4)	○	○	○
○ CLEANLINESS PRIOR TO FINAL ASSEMBLY (7.2.2.2)	○	○	○
○ NOZZLE LOAD TEST (6.3.6)	○	○	○
○ CHECK FOR CO-PLANAR MOUNTING PAD SURFACES (6.3.3)	○	○	○
○ MECHANICAL RUN UNTIL OIL TEMP. STABLE (7.3.4.7.1)	○	○	○
○ 4 HR. MECHANICAL RUN AFTER OIL TEMP. STABLE (7.3.4.7.3)	○	○	○
○ 4 HR. MECH. RUN TEST (7.3.4.7.2)	○	○	○
○ TRUE PEAK VELOCITY DATA (7.3.3.4d)	○	○	○
○ BRG HSG RESONANCE TEST (7.3.4.6)	○	○	○
○ REMOVE /INSPECT HYDRODYNAMIC BEARINGS AFTER TEST (8.2.7.5)	○	○	○
○ AUXILIARY EQUIPMENT TEST (7.3.4.5)	○	○	○
[○] IMPACT TESTING (5.12.4.3)	○	○	○
○ PER EN 13445			
○ PER ASME VIII			
○ _____	○	○	○

- ○ VENDOR KEEP REPAIR AND HT RECORDS (7.2.1.1c)
- ○ VENDOR SUBMIT TEST PROCEDURES (7.3.1.2 /9.2.5)
- ○ VENDOR SUBMIT TEST DATA WITHIN 24 HOURS (7.3.3.3e)
- ○ INCLUDE PLOTTED VIBRATION SPECTRA (5.9.3.3)
- ○ RECORD FINAL ASSEMBLY RUNNING CLEARANCES
- ○ SUBMIT INSPECTION CHECK LIST (7.1.6)

REMARKS

Figure N.2 - Bomb Cards - U.S. system units (continuation)

CENTRIFUGAL PUMP DATA SHEET
VERTICALLY SUSPENDED (TYPE VS)
US CUSTOMARY UNITS

PAGE 3 OF ____

JOB NO. ____ ITEM NO.(S) ____
REQ /SPEC NO. ____ / ____
PURCH ORDER NO. ____ DATE ____
INQUIRY NO ____ BY ____

CONSTRUCTION

ROTATION (VIEWED FROM CPLG END) ☐ CW ☐ CCW
PUMP TYPE: (1.3)
☐ VS1 ☐ VS2 ☐ VS3 ☐ VS4 ☐ VS5 ☐ VS6 ☐ VS7
CASING MOUNTING: ☐ SUMP COVER PLATE
☐ INLINE ☐ SEPARATE MOUNTING PLATE (8.3.8.3.1)
☐ SEPARATE SOLE PLATE (8.3.8.3.2)
CASING SPLIT:
☐ AXIAL ☐ RADIAL
CASING TYPE:
☐ SINGLE VOLUTE ☐ MULTIPLE VOLUTE ☐ DIFFUSER
CASE PRESSURE RATING:
☐ MAX ALLOWABLE WORKING PRESSURE ____ (PSIG)
@ ____ (°F)
☐ HYDROTEST PRESSURE ____ (PSIG)
○ SUCTION PRESS. REGIONS MUST BE DESIGNED FOR MAWP (5.3.6)
☐ NOZZLE CONNECTIONS: (5.4.2)

	SIZE (IN)	FLANGE RATING (LBS)	FACING	POSITION
SUCTION				
DISCHARGE				
BALANCE DRUM				

PRESSURE CASING AUX. CONNECTIONS: (5.4.3)

	NO.	SIZE (NPS)	TYPE
☐ DRAIN			
☐ VENT			
☐ WARM-UP			
☐ BALANCE /LEAK-OFF			

☐ MACHINED AND STUDDED CONNECTIONS (5.4.3.8)
○ CYLINDRICAL THREADS REQUIRED (5.4.3.3)
ROTOR:
○ COMPONENT BALANCE TO ISO 1940 G1.0 (5.9.4.4)
○ SHRINK FIT -LIMITED MOVEMENT IMPELLERS (8.2.2.3)
COUPLING:
○ MANUFACTURER ____ ☐ MODEL ____
☐ RATING (HP/100 rpm in) ____
☐ SPACER LENGTH ____ (IN) ☐ SERVICE FACTOR ____
☐ KEED
THROUGH COUPLING:
○ MANUFACTURER ____ ☐ MODEL ____
☐ RATING (HP/100 rpm in) ____ ○ LUBE ____
☐ SPACER LENGTH ____ (IN) ☐ SERVICE FACTOR ____
☐ KEED
DRIVER HALF COUPLING MOUNTED BY:
○ PUMP MFR. ○ DRIVER MFR. ○ PURCHASER
○ COUPLING BALANCED TO ISO 1940-1 G 6.3 (5.2.3)
○ COUPLING PER ISO 14691 (5.2.4)
○ COUPLING PER ISO 10441 (5.2.4)
○ COUPLING PER API671 (5.2.4)
○ NON SPARK COUPLING GUARD (5.2.14c)
○ COUPLING GUARD STANDARD PER ____ (5.2.14a)
MECHANICAL SEAL:
○ SEE ATTACHED ISO 21049/API682 DATA SHEET

SURFACE PREPARATION AND PAINT

☐ MANUFACTURER'S STANDARD ○ OTHER (SEE BELOW)
PUMP:
○ PUMP SURFACE PREPARATION ____
☐ PRIMER ____
○ FINISH COAT ____
BASEPLATE /COLUMN: (5.3.17)
○ BASEPLATE SURFACE PREPARATION ____
○ PRIMER ____
○ FINISH COAT ____
SHIPMENT: (7.4.1)
○ DOMESTIC ○ EXPORT ○ EXPORT BOXING REQUIRED
○ OUTDOOR STORAGE MORE THAN 6 MONTHS
SPARE ROTOR ASSEMBLY PACKAGED FOR:
○ HORIZONTAL STORAGE ○ VERTICAL STORAGE
○ TYPE OF SHIPPING PREPARATION ____

HEATING AND COOLING

○ HEATING JACKET REQ'D. (5.8.9) ☐ COOLING REQ'D.
☐ COOLING WATER PIPING PLAN (5.5.3.1) ____
C.W. PIPING:
☐ PIPE ☐ TUBING; FITTINGS ____
C.W. PIPING MATERIALS:
☐ S.STEEL ☐ C.STEEL ☐ GALVANIZED
COOLING WATER REQUIREMENTS:
☐ BEARING HOUSING ____ (GPM) @ ____ (PSIG)
☐ HEAT EXCHANGER ____ (GPM) @ ____ (PSIG)
STEAM PIPING ○ TUBING ○ PIPE

BEARINGS AND LUBRICATION

BEARING (TYPE/NUMBER):
☐ RADIAL ____ / ____
☐ THRUST ____ / ____
LUBRICATION (5.11.3, 5.11.4):
☐ GREASE ☐ FLOOD ○ PURGE OIL MIST
☐ PLUNGER ○ PURE OIL MIST
○ CONSTANT LEVEL OILER PREFERENCE (5.10.2.2): ____
☐ OIL VISC. ISO GRADE ____
○ REVIEW AND APPROVE THRUST BEARING SIZE
☐ OIL HEATER REQUIRED: ○ STEAM ○ ELECTRIC

INSTRUMENTATION (5.4.2)

○ ACCELEROMETER (5.4.2.3) ____
○ PROVISION FOR MOUNTING ONLY (5.10.2.11)
○ FLAT SURFACE REQ'D (5.10.2.12)
○ PRESSURE GAUGE TYPE ____

REMARKS: ____

☐ WEIGHTS

WEIGHT OF PUMP (LBS) ____
WEIGHT OF DRIVER (LBS) ____
WEIGHT OF GEAR (LBS) ____
WEIGHT OF BASEPLATE (LBS) ____
TOTAL WEIGHT (LBS) ____

Figure N.2 – Bomb Cards - USA system units (continuation)

CENTRIFUGAL PUMP DATA SHEET
VERTICALLY SUSPENDED (TYPE VS)
US CUSTOMARY UNITS

PAGE 4 OF ____

JOB NO. ____ ITEM NO.(S) ____
REQ /SPEC NO. ____ / ____
PURCH ORDER NO. ____ DATE ____
INQUIRY NO ____ BY ____

SPARE PARTS (TABLE 18)

- ○ START-UP ○ NORMAL MAINTENANCE
- ○ SPECIFY ____

OTHER PURCHASER REQUIREMENTS

- ○ COORDINATION MEETING REQUIRED (9.1.3)
- ○ MAXIMUM DISCHARGE PRESSURE TO INCLUDE (5.3.2)
  - ○ MAX RELATIVE DENSITY
  - ○ MAX DIA. IMPELLERS AND/OR NO OF STAGES
  - ○ OPERATION TO TRIP SPEED
- ○ CONNECTION DESIGN APPROVAL (5.3.2.3.4)
- ○ TORSIONAL ANALYSIS REQUIRED (5.9.2.1)
- ○ TORSIONAL ANALYSIS REPORT (5.9.2.6)
- ○ PROGRESS REPORTS (9.3.3)
- ○ OUTLINE OF PROCEDURES FOR OPTIONAL TESTS (9.2.5)
- ○ ADDITIONAL DATA REQUIRING 20 YEARS RETENTION (7.2.2.1f)
- MANIFOLD PIPING TO SINGLE CONNECTION (6.5.1.6)
  - [○] VENT [○] VENT [○] COOLING WATER
- [○] MOUNT SEAL RESERVOIR OFF BASEPLATE (6.5.1.4)
- [○] FLANGES REQUIRED IN PLACE OF SOCKET WELD UNIONS (6.5.2.1)
- CONNECTION BOLTING ○ PTFE COATING ○ SS
  - ○ PAINTED ○ ASTM A153 GALVANIZED
- [○] INSTALLATION LIST IN PROPOSAL (9.2.3L)

○ VERTICAL PUMPS

- [ ] PUMP THRUST, (+) UP (-) DOWN
  - AT MIN. FLOW ____ (LBS) ____ (LBS)
  - AT RATED FLOW ____ (LBS) ____ (LBS)
  - MAX THRUST ____ (LBS) ____ (LBS)
- [○] SOLEPLATE REQ'D. (8.3.8.3.3) ____ (IN) X ____ (IN)
- ○ SEPARATE MOUNTING PLATE REQUIRED (8.3.8.3.3)
- [ ] SOLEPLATE THICKNESS ____ (IN)

COLUMN PIPE, [ ] FLANGED [ ] THREADED
DIAMETER ____ (IN) LENGTH ____ (FT)

GUIDE BUSHINGS
- [ ] NUMBER ____
- [ ] LINE SHAFT BEARING SPACING ____ (IN)

GUIDE BUSHINGS LUBE,
- [ ] WATER [ ] OIL
- [ ] GREASE [ ] PUMPAGE

LINESHAFT, [○] OPEN [○] ENCLOSED
- [ ] LINE SHAFT DIAMETER, ____ (IN)
- [ ] TUBE DIAMETER, ____ (IN)

LINESHAFT COUPLING,
- [ ] LINE SHAFT DIAMETER, [ ] SLEEVE & KEY [ ] THREADED
- [ ] SUCTION CAN THICKNESS ____ (IN)
  - [ ] LENGTH ____ (FT)
  - [ ] DIAMETER ____ (FT)
- ○ SUCTION STRAINER TYPE ____
- ○ FLOAT & ROD ○ FLOAT SWITCH
- ○ IMPELLER COLLETS ACCEPTABLE (5.6.3)
- ○ HARDENED SLEEVES UNDER BEARINGS (8.3.3.0.5)

VERTICAL PUMPS (CONT.)

- ○ PUMP AND STRUCTURE DYNAMIC ANALYSIS (8.3.5)
- ○ DRAIN PIPED TO SURFACE (8.3.3.3.5)

QA INSPECTION AND TESTING

- ○ SHOP INSPECTION (7.1.4) ○ PERF. CURVE APPROVAL
- [○] TEST WITH SUBSTITUTE SEAL (7.3.3.2b)

TEST	NON-W/T	W/T	OBSERVE
○ HYDROSTATIC TEST OF HOUSING AND COLUMN (8.3.1.3.2)	○	○	○
○ HYDROSTATIC (7.3.2)	○	○	○
○ PERFORMANCE (7.3.3)	○	○	○
○ RETEST ON SEAL LEAK (7.3.3.2d)	○	○	○
○ NPSH (7.3.4.2)	○	○	○
○ COMPLETE UNIT TEST (7.3.4.3)	○	○	○
○ SOUND LEVEL TEST (7.3.4.4)	○	○	○
○ CLEANLINESS PRIOR TO FINAL ASSEMBLY (7.2.2.2)	○	○	○
○ NOZZLE LOAD TEST (6.3.6)	○	○	○
○ 4 HR. MECHANICAL RUN TEST (7.3.4.7)	○	○	○
○ MECHANICAL RUN UNTIL OIL TEMP. STABLE (7.3.4.7.1)	○	○	○
○ 4 HR. MECHANICAL RUN AFTER OIL TEMP. STABLE (7.3.4.7.2)	○	○	○
○ TRUE PEAK VELOCITY DATA (7.3.3.4d)	○	○	○
○ RESONANCE TEST (8.3.9.2)	○	○	○
○ AUXILIARY EQUIPMENT TEST (7.3.4.5)	○	○	○
[○] IMPACT TESTING (5.12.4.3)	○	○	○
○ PER EN 13445			
○ PER ASME VIII			

- ○ VENDOR KEEP REPAIR AND HT RECORDS (7.2.1.1c)
- ○ VENDOR SUBMIT TEST PROCEDURES (7.3.1.2 / 9.2.5)
- ○ VENDOR SUBMIT TEST DATA WITHIN 24 HOURS (7.3.3.3e)
- ○ INCLUDE PLOTTED VIBRATION SPECTRA (5.9.3.3)
- ○ RECORD FINAL ASSEMBLY RUNNING CLEARANCES
- ○ COMPLETION OF INSPECTION CHECK LIST (7.1.6)
- ○ MATERIAL CERTIFICATION REQUIRED (5.12.1.8)
  - ○ CASING ○ IMPELLER ○ SHAFT
  - ○ OTHER ____
- ○ CASTING REPAIR PROCEDURE APPROVAL REQ'D (5.12.2.5)
- [○] INSPECTION REQUIRED FOR CONNECTION WELDS (5.12.3.4)
  - [○] MAG PARTICLE [○] LIQUID PENETRANT
  - [○] RADIOGRAPHIC [○] ULTRASONIC
- [○] INSPECTION REQUIRED FOR CASTINGS (7.2.1.3) (5.12.1.5)
  - [○] MAG PARTICLE [○] LIQUID PENETRANT
  - [○] RADIOGRAPHIC [○] ULTRASONIC
- ○ HARDNESS TEST REQ'D. (7.2.2.3)
- ○ ADDITIONAL SUBSURFACE EXAMINATION (7.2.2.3)
  - FOR ____
  - METHOD ____

SUMP ARRANGEMENT

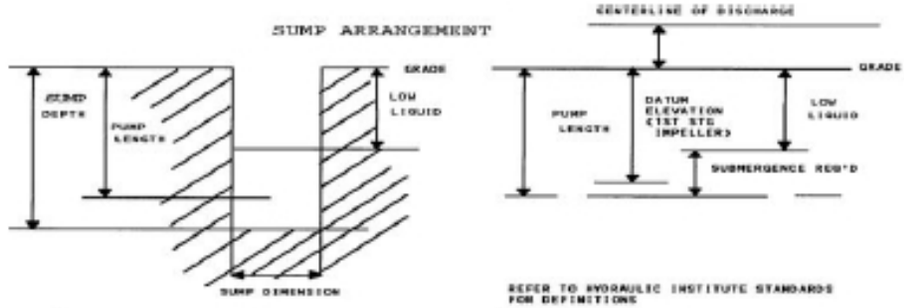

REFER TO HYDRAULIC INSTITUTE STANDARDS FOR DEFINITIONS

- ○ SUMP DEPTH ____ (FT)
- ○ SUMP DIMENSION ____ (FT)
- ○ LOW LIQUID ____ (FT)
- [ ] PUMP LENGTH ____ (FT)
- [ ] SUBMERGENCE REQ'D ____ (FT)
- [ ] CENTERLINE DISCHARGE HEIGHT ____ (FT)
- [ ] DATUM ELEVATION ____ (FT)

Figure N.2 - Bomb Specifications - U.S. system units (continuation)

PAGE 5 OF

CENTRIFUGAL PUMP

JOB NO. ITEM NO.(S)
REQ /SPEC NO. /
PURCH ORDER NO. DATE
INQUIRY NO BY

☐ PRESSURE DESIGN CODES
○ WELDING REQUIREMENTS
☐ PURCHASER DEFINED MATERIAL INSPECTIONS

1 APPLICABLE TO. ○ PROPOSALS ○ PURCHASE ☐ AS BUILT
2 FOR UNIT
3 SITE SERVICE
4 NOTES INFORMATION BELOW TO BE COMPLETED ○ BY PURCHASER ☐ BY MANUFACTURER ☐ BY MANUFACTURER OR PURCHASER
5
5 PRESSURE VESSEL DESIGN CODE REFERENCE.
6 ☐ THESE REFERENCES MUST BE LISTED BY THE MANUFACTURER
** CASTING FACTORS USED IN DESIGN (5.3.A) (TABLE 3) ☐
** SOURCE OF MATERIAL PROPERTIES ☐
**
** WELDING AND REPAIRS (5.12.3)
** THESE REFERENCES MUST BE LISTED BY THE PURCHASER. (DEFAULT TO TABLE 10 IF NO PURCHASER PREFERENCE IS STATED)
** ○ ALTERNATE WELDING CODES AND STANDARDS (5.12.3.1)

** Welding Requirement (Applicable Code or Standard)	Purchaser defined	Default per Table 10
** Welder/operator qualification	○	○
** Welding procedure qualification	○	○
** Non-pressure retaining structural welding such as baseplates or supports	○	○
** Magnetic particle or liquid penetrant examination of the plate edges	○	○
** Postweld heat treatment	○	○
** Postweld heat treatment of casting fabrication welds	○	○

** MATERIAL INSPECTION (7.2.2.1)(7.2.2.2)
** THESE REFERENCES MUST BE LISTED BY THE PURCHASER (DEFAULT TO TABLE 13 IF NO PURCHASER PREFERENCE IS STATED)
** ○ ALTERNATIVE MATERIAL INSPECTIONS AND ACCEPTANCE CRITERIA (SEE TABLE 13)

** Type of Inspection	Methods	For fabrications	Castings
** Radiography	○	○	○
** Ultrasonic inspection	○	○	○
** Magnetic particle inspection	○	○	○
** Liquid penetrant inspection	○	○	○

** REMARKS

Figure N.2 - Bomb Cards - USA units of the system (continuation)

Bibliography

ISO 185, gray cast iron - Classification.
ISO 683-1, steels for Heat Treatment, alloy steels and cutting steels free - Part 1: Direct hardening of non-alloy and low alloy forged steel in the form of different black products.
ISO 683-13: 1986, steels for Heat Treatment, alloyed steels and steels of free cut - Part 13: forged steel steels.
ISO 683-18, steels for heat treatment, alloyed steels and cutting steels free - Part 18: shiny products of unalloyed and low-alloy steels.
ISO 2604-2, steel products for pressure applications - Requirements for quality - Part 2: seamless forged tubes.
ISO 3448, industrial liquid lubricants - ISO viscosity classification.
ISO 3740, Acoustics - Determination of sound power levels of sources Noise - Guidelines for the use of basic standards.
ISO 3744, Acoustics - Determination of sound power levels of sources noise using sound pressure - Engineering method for field conditions free on a reflective plane.
ISO 3746, Acoustics - Determination of sound power levels of sources of noise using sound pressure - Control method on a measurement surface enveloping about a reflective plane.
ISO 4991, cast steel parts for pressure applications.
ISO 14120, Safety of machinery - Guards - General requirements for the design and construction of fixed assets and mobile covers
EN 953 Machine safety - Guards - General requirements for the design and construction of fixed assets and movable covers
[13] en 1561, Fundador - hierros grises del elenco.
EN 10028-2, flat steel products for pressure applications - Part 2: without machining and from alloying of steels with specific properties at temperature high.
EN 10028-7, flat steel products for pressure applications - Part 7: Stainless steels.
EN 10083-1, quenched and tempered steels - Part 1: Technical conditions of delivery supply for special steels.
EN 10083 -2, hardened and tempered steel - Part 2: Technical conditions of non-alloy quality steel supply.
EN 10088-1, stainless steels - Part 1: List of stainless steels.
EN 10088-3, stainless steels - Part 3: Technical delivery conditions for semi-finished products, bars, rods and sections for purposes generals.
EN 10208 -1, Steel pipes for pipelines of combustible fluids - Technical supply conditions - Part 1: Class A pipes. requirement
EN 10213 -2, Technical delivery conditions for steel parts for pressure applications - Part 2: Types of steel for use at room temperature and high temperatures.
EN 10213-4, the technical delivery conditions for castings of Steel for pressure applications - Part 4: austenitic and austenitic-ferritic comrades g steel.

EN 10222-2, Forged steel pieces for pressure devices - Part 2: Steels ferritic and martensitic with specified properties at high temperature.
EN 10222 -5, Forged steel pieces for pressure equipment - Part 5: martensitic, austenitic, and ferritic-austenitic stainless steels.
EN 10250 -4, open die forged steel parts for engineering purposes in general - Part 4: Stainless steels.
EN 10269, Nickel steels and alloys for fasteners properties at specified high and/or low temperatures.
EN 10272, stainless steel bars for pressure applications.
EN 10273, hot rolled, welded steel bars for applications to pressure with the specified elevated temperature properties.
EN 10283, corrosion-resistant steel casting.
ABMA 9, load capacities and fatigue resistance of bearings balls.
ABMA 20, metric and roller ball (except for roller bearings) conical), according to the basic limit planes: Dimensions of the limit, tolerances and identification.
API 5L, Specification for line pipe
API 614, lubrication, oil control systems for applications of special purpose of the sealing shaft, and.
API 682, sealing systems for shafts for centrifugal and rotary pumps.
API RP 686, machinery installation and design of the installation
ASME B1.20.1, general purpose pipe threads (inches).
ASME B15.1, safety standard for power transmission devices mechanics.
ASME B31.3, process piping.
ASTM A 48, the standard specification for gray iron castings.
ASTM A 53, Standard Specification for Pipe, Steel, Black and Hot-Dipped hot, galvanized, welded and seamless.
ASTM A 105, Standard specification for carbon steel forged fittings for pipelines.
ASTM A 106, Standard specification for seamless carbon steel pipe sewing for high temperature service.
ASTM A 153, Standard specification for zinc coating (by hot dip) of iron and steel hardware
ASTM A 181, Standard Specification for Carbon Steel Forged Pieces for general purpose pipes.
ASTM A 182 Standard Specification for Forged Alloy Steel Pipe or laminated flanges, forged accessories and valves and parts for high service temperature.
ASTM A 193, Standard specification for alloy steel and steel stainless, high temperature materials bolts service.
ASTM A 194, Standard specification for carbon and alloy steel nuts for high pressure or high temperature service screws, or both.
ASTM A 197, Standard specification for malleable iron castings.
ASTM A 216, Standard specification for carbon steel castings, suitable for high temperature service fusion welding.

ASTM A 217, Standard Specification for Martensitic Steel Casting stainless and alloy, for parts that contain pressure, suitable for high service temperature

A ASTM, Standard specification 240 for chromium and chromium-nickel, plate stainless steel, blade, and stripping for pressure vessels and for applications generals.

ASTM A 266, Standard specification for carbon steel forged parts for the components of the pressure vessel.

ASTM A 269, Standard Specification for Stainless Steel Pipe austenitic with and without seam for general service use.

ASTM A 276, Standard Specification for Stainless Steel Bars and Shapes.

ASTM A 278, Standard Specification for Gray Iron Castings for the parts that contain pressure for temperatures up to 650 °F.

ASTM A 312, Standard specification for austenitic stainless steel pipes with and without seams.

ASTM A 338, the standard specification for malleable iron flanges, fittings of piping, valves, and railroad parts, another service of high resistance to temperatures of up to 650 marine and ° F (345 ° C).

ASTM A 351, Standard specification for austenitic, ferritic castings austenitic (duplex), of parts that contain pressure.

ASTM A 352 Standard specification for castings of steel, ferritic and martensitic, because it contains the pressure parts, suitable for low service. temperature.

ASTM A 434, Standard Specification for Steel Bars, Alloy, Forged in hot or cold finished, tempered and tempered.

ASTM, Standard specification for 473 forged stainless steel parts.

ASTM A 479, Standard specification for stainless steel bars and the ways for their use in boilers and other pressure vessels.

ASTM A 487, Standard specification for suitable steel castings for the pressure service.

ASTM A 515, Standard specification for pressure vessel plates, carbon steel, for medium and high temperature service.

ASTM A 516, Standard specification for plates for pressure vessels, carbon steel, for moderate and low temperature service

ASTM A 524, Standard Specification for Carbon Steel Pipe without sewing for atmospheric temperatures and below.

ASTM A 576, Standard specification for steel bars, carbon, forged hot, of special quality.

ASTM A 582, Standard specification for free machining stainless steel bars stainless

ASTM A 696, Standard Specification for Carbon Steel Bars, Forged hot or cold finished, special quality, components of the pipes of pressure.

ASTM A 743, Standard Specification for Castings, Chromium-Iron, Iron chrome, nickel, corrosion resistant, for general application.

ASTM A 790, Standard specification for seamless steel pipe and ferritic / austenitic stainless steel soldiers.

ASTM A 890, Standard specification for casting, iron, chromium, nickel and corrosion-resistant molybdenum, duplex (austenitic / ferritic) for its application general.
JS AG 3106, rolled steels for welded structures 0,14
JSA T 3202, forged carbon steel parts for pressure vessels.
JSA T 3214, forged stainless steel pieces for pressure vessels.
JSA T 3456, carbon steel pipes for high temperature service.
JSA T 3459, stainless steel tubes.
JSA T 4051, Carbon steels for machine structural use.
JSA T 4105, chromium molybdenum steels.
JSA T 4107, alloy steel materials for high temperature service bolts.
JSA T 4303, stainless steel bars.
JSA T 4304, hot-rolled, stainless steel plates, sheets, and strips.
JSA T 4319, stainless steel flowers and billets for forgings.
JSA T 5121, stainless steel castings.
JSA T 5501, castings of gray iron.
JSA T 5151, cast steel parts for high temperatures and service high pressure.
NACE Corrosion Engineer Reference Book.